ISF
INTERNATIONAL STREETLIFTING FEDERATION

Technical Rules of Streetlifting and Weighted Calisthenics

Official competition rulebook and judging standards

English edition

v5.3.2 | 20.11.2026

International Streetlifting Federation

streetlifting.pro

Document Structure

A quick navigation map for athletes, referees, organizers and federation officials.

	PREAMBLE.
	Glossary
1	SECTION 1. GENERAL PROVISIONS
2	SECTION 2. COMPETITION DISCIPLINES AND FORMATS
3	SECTION 3. PARTICIPANTS AND CATEGORIES
4	SECTION 4. TECHNICAL REQUIREMENTS FOR EXERCISE EXECUTION
5	SECTION 5. EQUIPMENT AND ELIGIBILITY
6	SECTION 6. EQUIPMENT AND SPECIFICATIONS
7	SECTION 7. COMPETITION PROCEDURES
8	SECTION 8. REFEREE PANEL
9	SECTION 9. SECRETARIAT & COMPETITION RECORDS
10	SECTION 10. ISF RECORDS & RANKINGS
11	SECTION 11. CONFLICT OF INTEREST AND ISF CODE OF ETHICS
12	SECTION 12. REGISTRATION AND RECOGNITION OF NATIONAL FEDERATIONS

The official version of these Rules is the English text. In case of discrepancies between language versions, the English text shall prevail.

PREAMBLE.

The International Streetlifting Federation (ISF) was established to develop, promote, and regulate the disciplines of Classic Streetlifting, Multirep Streetlifting and Weighted Calisthenics as international competitive sports. The ISF unites National Federations, clubs and athletes, and sets uniform standards for competition organization, refereeing, classification and athlete development. The ISF recognizes and abides by the provisions of the Olympic Charter and is committed to the fundamental principles of Olympism, including:

- Equality and non-discrimination in access to sport;
- Respect for the rights and dignity of athletes;
- Fair play and ethics;
- Protection of the health and well-being of participants;
- The fight against doping and manipulation in competition.

The ISF has formally incorporated the following into its operations:

- The World Anti-Doping Code (WADA);
- The Olympic Movement Code on the Prevention of Manipulation in Competitions (OM Code PMC);
- Safe Sport Principles — the protection of athletes from harassment, violence, discrimination and exploitation;
- Good Governance Standards — transparency, accountability and participation of all stakeholders.

Glossary

Classic Streetlifting
A strength competition format in which athletes perform a single repetition with maximal additional weight in pull-ups and dips, aimed at demonstrating maximal strength and technical stability.

Multirep Streetlifting
A competition format combining strength and functional endurance, where participants perform as many repetitions as possible with a fixed weight within 2 minutes.

Weighted Calisthenics
A multi-event competition format including four weighted exercises—muscle-up, pull-ups, dips, and barbell squats—designed to showcase an athlete’s comprehensive strength.

Divisions
Competition categories defining eligibility and level of competition, such as Amateur, Pro, and Adaptive.

Weight Categories
Athlete groupings based on body mass to ensure fair competition, determined by a pre-event weigh-in.

Age Categories
Athlete groupings by age range (e.g., Juniors, Open, Masters 40+), allowing competition within comparable age brackets.

Sex Categories
Athlete groupings based on sex assigned at birth (Men, Women), with an Unrestricted Division for those outside the binary classification.

Pull-Up
A bar exercise where the athlete pulls their body up until the whole lower jaw is above the bar and then lowers to full arm extension. Grip variants: pronated (pull-up grip) / supinated (chin-up grip). Pronated and supinated grips are equally permitted variants of the Pull-Up and are judged by the same technical standard.

Dip
A dip-bar exercise (performed on parallel or V-shaped bars; see § 6.3) where the athlete lowers their body until the shoulder joint is at or below elbow level, then extends the arms to full lock-out.

Muscle-Up
An exercise combining a pull-up and a dip on the bar or rings: the athlete moves from a full hang to a

position above the bar (or rings) with a full lock-out.

Bar Muscle-Up
the muscle-up on the bar; a discipline in the Weighted Calisthenics format. Performed by male athletes by default.

Ring Muscle-Up
the muscle-up on the rings; a discipline in the Weighted Calisthenics format. Performed by female athletes by default; no later than 10 minutes before the planned start of the attempts of their weight class, a female athlete may elect to perform a Bar Muscle-Up instead of a Ring Muscle-Up (see § 4.3).

Barbell Squat
An exercise in which the athlete, with a barbell on their back, squats until the top surface of the thigh at the hip joint drops below the top of the knee and then returns to the starting position.

Weights
Supplemental loads (plates, kettlebells) attached to an athlete’s belt to increase resistance during exercises.

Weight Belt
A specialized belt used to affix additional weights to an athlete’s body for weighted exercises.

Accessories / Supportive Gear
Permitted equipment—such as wrist wraps, elbow sleeves, knee sleeves, and chalk—used in compliance with ISF regulations.

Referee Signals
A light signal system (white for a valid attempt, red for no-lift) used by referees to indicate the result of an attempt; if unavailable, flags or cards of the same colours are used. Commands to the athlete are given by voice and hand signal.

Timer
A device for measuring the time allotted for an exercise attempt or platform call.

Appeal
An official request by an athlete or their representative to review a referee decision in a disputed situation.

Disqualification
The removal of an athlete from the competition—or a specific attempt—for rule violations, safety concerns, or unsportsmanlike conduct.

ISF Record
The officially recognized best performance in a discipline at a sanctioned ISF event, achieved under full compliance with all regulations.

Jury
A panel of senior referees (§ 8.8) responsible for ensuring adherence to the rules, handling appeals, and resolving disputes.

Chief Referee
The referee in the centre of the panel who gives the commands, stops the athlete after a false start and grants repeat attempts (§§ 7.4.5, 8.1).

Side Referees
The two referees at the sides of the platform; they judge the attempt equally with the Chief Referee, and the decision is made by a 2-of-3 majority (§ 8.1).

Head Referee
The referee in charge of the refereeing team, appointed by the organizer in agreement with ISF or the national federation; acts for the Jury in its absence (§ 8.8).

Technical Controller
The official who inspects equipment and gear before the competition (§§ 6.8–6.9).

Chief Secretary
The head of the Secretariat who keeps the competition protocol and, together with the referees, verifies records (§§ 7.7.5, 9.2).

False Start
Starting the movement before the “Start!” command. The Chief Referee stops the athlete and repeats the

commands; a false start is not a no-rep in itself (Section 4).

Repeat Attempt
An attempt granted again after a loading error, the organizer’s equipment failure or an assistant error; it is taken at the end of the round (§ 7.4.5).

ISF PS WC
The ISF points system for the Weighted Calisthenics absolute ranking (§ 10.9.6): ISF PS = 100 × Result / Expected with the expected result for the four lifts.

SECTION 1. GENERAL PROVISIONS

International Streetlifting Federation

1

1.1 Purpose and Scope

These Rules govern the organization and conduct of all official competitions held under the auspices of the ISF and its national bodies. They are mandatory at international, continental, and national events—including ranking, qualifying, and certification tournaments. The Rules apply to all stakeholders: athletes, coaches, referees, organizers, federation representatives, and other officials.

1.2 Goals and Objectives of the ISF

- Development and international promotion of streetlifting disciplines.
- Ensuring uniform standards for exercise execution, judging, and result tabulation.
- Creating fair and equal conditions for participation, regardless of sex, age, nationality, or other factors.
- Guaranteeing the safety, ethics, and integrity of the sport.
- Collaborating with international bodies such as the IOC, WADA, and ARISF.

1.3 ISF Competition Formats

The ISF officially recognizes the following competition formats:

- Classic Streetlifting – pull-ups and dips with additional weight, contested either as a two-event competition or as standalone events;
- Multirep Streetlifting – maximum repetitions with a fixed weight, contested either as a two-event competition or as standalone events;
- Weighted Calisthenics – a four-event competition with additional weight: muscle-up, pull-ups, dips, and barbell squats (or as standalone disciplines).

Organizers may stage tournaments in:

- Combined-event format – requiring completion of the full set of exercises for the given discipline;
- Individual-event format – if provided for in the competition regulations.

1.4 Compliance with International Standards

The ISF reaffirms its commitment to the following regulatory documents:

- The Olympic Charter – the foundation of the international sporting movement;
- The WADA Anti-Doping Code – binding on all participants;
- The Olympic Movement Code on the Prevention of Manipulation in Competitions (OM Code PMC);
- The Safe Sport Policy – ensuring the welfare and protection of athletes;
- Good Governance Principles – transparency, accountability, stakeholder participation, and regular electoral processes.

SECTION 2. COMPETITION DISCIPLINES AND FORMATS

2

International Streetlifting Federation

This section defines the main disciplines and competition formats conducted under the auspices of the International Streetlifting Federation (ISF): Classic Streetlifting, Multirep Streetlifting and Weighted Calisthenics.

Each format may be contested as an individual or team event, with separate age, bodyweight and sex categories. Technical standards for exercise execution are set out in Section 4, and the scoring system in § 10.9.

2.1 Classic Streetlifting

NOTE
Classic Streetlifting is a strength-only format in which athletes perform a single repetition with maximal additional weight. It is designed to showcase maximal strength and technical stability.

REFERENCE
Holding options

Two-Lift contest (2-Lift): - Pull-Ups + Dips with weight	Single-Lift events (1-Lift): - Pull-Ups for Max - Dips for Max.

REFERENCE
Procedure

- 3 attempts per exercise;
- Best successful attempt counts;
- In case of a tie:
- The athlete with the lower bodyweight at the official weigh-in ranks higher
- If bodyweights are equal, the athlete who achieved the result first ranks higher (see § 7.10)

2.2 Multirep Streetlifting

NOTE
Multirep Streetlifting combines strength and functional endurance. Athletes perform as many repetitions as possible with a fixed weight within 2 minutes.

REFERENCE
Competition options

Two-Lift contest (2-Lift): Pull-Ups + Dips with weight	Single-Lift events (1-Lift): Pull-Ups for Reps with weight Dips for Reps with weight

REFERENCE
Weight standards and divisions

In Multirep Streetlifting, the weight depends on sex, age and division. ISF standards are:

Men

- Sub-Juniors (13–17): Pull-Ups 8 kg, Dips 16 kg, Two-Lift 8 + 16 kg;
- Juniors (18–22) and Masters (40+, all subcategories): Pull-Ups 16 kg, Dips 24 kg, Two-Lift 16 + 24 kg;

- Open, Amateur: Pull-Ups 24 kg, Dips 32 kg, Two-Lift 24 + 32 kg;
- Open, Pro: Pull-Ups 32 kg, Dips 48 kg, Two-Lift 32 + 48 kg.

Women

- Sub-Juniors (13–17), Juniors (18–22) and Masters (40+, all subcategories): Pull-Ups 8 kg, Dips 12 kg, Two-Lift 8 + 12 kg;
- Open: Pull-Ups 12 kg, Dips 16 kg, Two-Lift 12 + 16 kg.
- All specified loads are mandatory at official ISF events. Any changes require ISF approval and must be detailed in the Competition Regulations.

2.3 Weighted Calisthenics

NOTE
Weighted Calisthenics is a multi-event format consisting of four weighted exercises. It demonstrates an athlete's all-around strength. The ISF's flagship international format is the Four-Lift contest.

REFERENCE
Competition options

Four-Lift contest (4-Lift): Muscle-Up Pull-Ups Dips Barbell Squats	Single-Lift events (1-Lift): Permitted if provided for in the Competition Regulations.

REFERENCE
Procedure

- 3 attempts per exercise
- Best successful lift counts
- Final total is expressed in kilograms; the absolute ranking uses ISF PS WC (§ 10.9.6)

2.4 Team Competition

NOTE
At the organizer's discretion, a team competition may be introduced. The format, team size and scoring rules must be specified in the Competition Regulations.

REFERENCE
Possible team scoring methods

- Sum of ISF PS of top performers
- Medal count
- Point ranking by places (e.g. 12–9–7–5…)
- League or Cup system

2.5 Tournament Regulations

NOTE
Every ISF-sanctioned event must publish official Competition Regulations, which shall include

- Discipline: Classic, Multirep, or Weighted Calisthenics
- Format: Combined-event or Single-event
- Sex, age and bodyweight categories
- Eligibility criteria (divisions with/without doping control)
- Scoring type: individual, team, or absolute
- ISF status (national/international)

The Competition Regulations constitute a legally binding document and must comply with these ISF Rules.

SECTION 3. PARTICIPANTS AND CATEGORIES

International Streetlifting Federation

3

This section defines the main participant categories—age, weight and sport divisions—applicable to all ISF disciplines: Classic Streetlifting, Multirep Streetlifting and Weighted Calisthenics. It applies to all international and national tournaments under the ISF umbrella. Equipment, eligibility, anti-doping status and sex classification requirements are set out in § 3.2 and Section 5.

3.1 Eligibility

- Athletes must be at least 13 years old on the day of the competition.
- Athletes under 18 years must submit a signed parental or legal-guardian consent form.
- Competitors must be listed on the official start list and complete the registration process.
- Additional restrictions may apply as specified in the Competition Regulations.

3.2 Men’s and Women’s Categories

The ISF adheres to the principles of non-discrimination, fairness and scientific validity as set out in the Olympic Charter and IOC policies. All official ISF categories by sex are based on the athlete’s sex assigned at birth:

- Male — athletes assigned male at birth
- Female — athletes assigned female at birth

REFERENCE
At the organizer’s discretion, an Unrestricted Division may be introduced for athletes not fitting the binary classification. Unrestricted Division results are recorded separately from the main competition.

REFERENCE
ISF respects each athlete’s right to gender identity; personal data disclosure is only required for medical or anti-doping purposes.

3.3 Age categories

Age is determined on the date of competition. For ISF international championships, the following core age categories are mandatory:

Men / Women

№	Category	Age
1	Sub-Junior	13-17 years
2	Juniors	18-22 years
3	Open	13 years and above
4	Masters	40 years and above

REFERENCE
International events use a combined Masters 40+ category.

REFERENCE
National/regional events may further subdivide Masters into M1–M6 (e.g. M1: 40–44, M2: 45–49, M3: 50–54, M4: 55–59, M5: 60–69, M6: 70+), provided that technical standards and award procedures remain consistent.

3.4 Weight categories

Weight class is determined by the official weigh-in held before competition according to the event schedule.

Women	Men
44.0 kg (≤ 44.0 kg) – Sub-Juniors only	52.0 kg (≤ 52.0 kg) – Sub-Juniors only
48.0 kg (> 44.0 – 48.0 kg)	56.0 kg (> 52.0 – 56.0 kg)
52.0 kg (> 48.0 – 52.0 kg)	60.0 kg (> 56.0 – 60.0 kg)
56.0 kg (> 52.0 – 56.0 kg)	67.5 kg (> 60.0 – 67.5 kg)
60.0 kg (> 56.0 – 60.0 kg)	75.0 kg (> 67.5 – 75.0 kg)
67.5 kg (> 60.0 – 67.5 kg)	82.5 kg (> 75.0 – 82.5 kg)
+67.5 kg (> 67.5 kg)	90.0 kg (> 82.5 – 90.0 kg)
	100.0 kg (> 90.0 – 100.0 kg)
	110.0 kg (> 100.0 – 110.0 kg)
	+110.0 kg (> 110.0 kg)

3.5 Sports divisions

Each athlete registers in one of the following sport divisions:

Division	Designation	Description
Amateur	Amateur	Athletes subject to or willing to undergo anti-doping control; results count toward ISF Amateur rankings and records.
Professional	Pro	Athletes competing without anti-doping control; results count in separate ISF Pro rankings and records.
Adaptive	Adaptive	Athletes with confirmed health impairments; participation requires approval by the organizers and the ISF; results recorded separately; ISF records are not kept for this division.

REFERENCE
An event may offer one or multiple divisions based on competition level and objectives. ISF maintains separate records and rankings for Amateur and Pro divisions to ensure fairness and transparency. The requirement for anti-doping control is determined by the organizers and must be clearly stated in the Competition Regulations.

3.6 Dual Entry (Double Classification)

An athlete competing in a multi-lift event may have their results also counted in the individual disciplines, and may be entered simultaneously in both their age category and the Open category, subject to:

- Competitions conducted on the same day;
- Only one platform call per exercise;
- Results automatically count toward both categories.

If competitions occur on different days, repeat entries are permitted, but attempts must be performed separately for each category.

SECTION 4. TECHNICAL REQUIREMENTS FOR EXERCISE EXECUTION

International Streetlifting Federation

4

This section sets out the technical requirements for all ISF disciplines—Classic Streetlifting, Multirep Streetlifting and Weighted Calisthenics.

Each discipline includes specific instructions on starting position, athlete movement, referee signals, and a list of infractions that will invalidate an attempt. Single-rep disciplines (Classic and Weighted Calisthenics) use a three-attempt format; Multirep Streetlifting allows one attempt to achieve the maximum repetitions within the time limit.

General Provisions for ISF Exercise Execution

- All exercises must be performed in accordance with the competition format and discipline (see Section 2).
- Attempt format: Classic Streetlifting and Weighted Calisthenics – three attempts per exercise; Multirep Streetlifting – one timed attempt.
- Weight attachment: Additional weight is attached to the athlete’s belt in accordance with § 5.2 (barbell on the back in the Squat); the centre of gravity of the weight must be below knee level
- Referee signals: Movements begin on the command “Start!” and conclude on “Finish!” or “Rack!” (in Squat).
- Valid attempt criteria: Full compliance with fixation standards, prescribed body position, and visual confirmation by the referee.
- Dispute resolution: the decision is made by a majority of the three referees (2 of 3), as in the IPF; it is final unless changed by the Jury on appeal (§ 7.9).

4.1 Pull-Up

NOTE
Pull-Ups are a core discipline in every ISF discipline. The exercise is performed on a horizontal bar with additional weight. The goal is to raise the jaw above the bar and achieve full lock-out in both bottom and top positions.

Event	Format	No. of attempts
Classic Streetlifting	1 rep for maximum weight	3
Multirep Streetlifting	Maximum reps in 2 minutes	1
Weighted Calisthenics	1 rep for maximum weight	3

REFERENCE
Starting Position

- Athlete hangs on the bar with arms fully locked (180°).
- Torso vertical and stable, no leg crossing, feet pointed downward.
- Centre of gravity of the weight below knee level (see § 5.2).
- Grip may be pronated (palms away) or supinated (palms toward).
- Forbidden: mixed grip, false grip.

REFERENCE
General Referee Commands

Signal	Issued by	Meaning
Voice: “[First Name Last Name] is invited to the platform.”	Secretary	Athlete called to the platform
Voice: “Get Ready!”	Chief Referee	Assume the starting position
Voice: “Start!” (hand down + voice)	Chief Referee	Begin the attempt
Voice: “Finish!” (hand back + voice)	Chief Referee	End the attempt (Classic / WC)

REFERENCE
Additional Commands (Multirep only)

Referee's action	Description
Count announcement:	After each valid rep: “One!”, “Two!”, ...
Correction signals:	The referee may give verbal signals when mistakes are made:
- "Lower!"	no full extension at bottom
- "Higher!"	jaw not above the bar
- "Legs!"	leg-position fault
- "Balance!"	body sway or instability
- "Grip!"	loss of contact
Three consecutive errors:	Chief Referee commands “Finish!”

REFERENCE
Technical Standard

Position	Requirement
Bottom point	Arms fully extended (180°); body stable without swing; feet downward
Top point	The entire lower edge of the jaw, from the angle of the jaw to the chin, is above the top edge of the bar; the chin need not be brought forward over the bar; tilting the head back is permitted provided the angle of the jaw is also above the top edge of the bar
Movement	No jerks, swings or kipping; a minimal, smooth change of knee and hip angles that gives no advantage is permitted

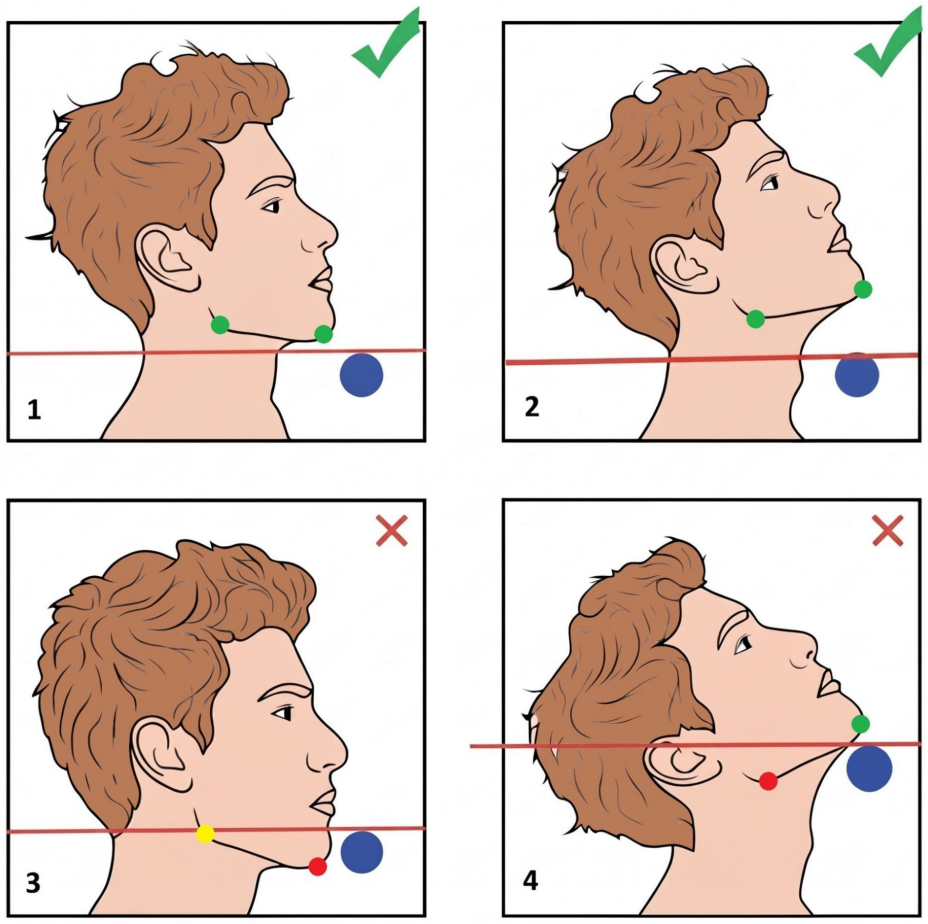

Figure — top position of a pull-up (red line: top edge of the bar). 1 and 2 — valid: the whole lower jaw, from the angle to the chin, is above the bar, including with the head tilted back; the chin need not be brought forward over the bar. 3 and 4 — invalid: the chin or the angle of the jaw is level with or below the bar.

Invalid Attempt (No-Rep)

- Referee-signal violations:
- Continuing the movement after the Chief Referee has stopped a false start (movement before the “Start!” command).
- Movement finishes before the “Finish!” command (single-rep formats).
- Range-of-motion violations:
- Starting with bent arms (without an approved medical exemption).
- The lower jaw is not entirely above the top edge of the bar: the chin or the angle of the jaw is level with or below the bar (including with the head tilted back).
- Arms not fully extended at the bottom (< 180°).
- No full fixation in either the bottom or the top position.
- Downward movement before the top position is reached (including “double movement” up–down–up); a brief pause without downward movement is permitted;
- A rapid drop (rebound) after the “Start!” command before initiating the pull.
- Technique violations:
- Jerks, swings, body rocking or kipping.
- Excessive pelvic tilt, spinal hyperextension or leg kick that assists the lift.
- Loss of balance or marked instability of the torso.
- Contact violations:
- Loss of contact with the bar (re-grip, hand release).

- Touching the bar, platform, equipment or assistants before the “Finish!” command.
- Weight violations:
- Dropping of the weight through the athlete’s fault, swinging, or the weight touching the bar / platform / equipment / assistants before “Finish!”.
- Centre of gravity of the weight above knee level (breach of § 5.2).
- Other violations:
- Ignoring referee commands.
- Any other failure to comply with the requirements of § 4.1 of these Rules.

Allowed

- Minor knee bend provided there are no jerks or swings.
- Slight grip correction without losing contact with the bar.
- Brief technical pause at the bottom or top.
- After a false start the Chief Referee stops the athlete and repeats the commands; if the weight dropped through no fault of the athlete (loading error, organizer’s equipment failure, assistant error), a repeat attempt is granted under § 7.4.5; if the weight drops through the athlete’s fault (own belt, attachment, loss of control), the attempt is a no-rep.
- Starting with partially bent arms is permitted only with a prior medical exemption issued in accordance with ISF standards.

4.2 Dip

NOTE
Dips are a core discipline in every ISF discipline. They are performed on dip bars (parallel or V-shaped; see § 6.3) with additional weight attached to a belt (see § 5.2). The goal is to descend to the required depth and return to the starting position with full lock-out.

Event	Format	No. of attempts
Classic Streetlifting	1 repetition with maximum weight	3
Multirep Streetlifting	Maximum repetitions in 2 minutes	1
Weighted Calisthenics	1 repetition with maximum weight	3

REFERENCE
Starting Position

- The athlete supports themselves on straight arms, elbows fully locked (180°); torso vertical and stable.
- Shoulders are depressed and retracted.
- Legs may hang straight or be bent at the knees — provided the position is kept essentially unchanged for the whole exercise (see “Allowed”).
- Weight hangs below knee level (see § 5.2).
- The grip must be firm and symmetrical. Both hands must fully wrap around the bars. Different thumb positions are permitted if control and safety are not compromised.

REFERENCE
General Referee Commands

Signal	Issued by	Meaning
Voice: “[first name last name] is invited to the platform.”	Secretary	Athlete called to the platform
Voice: “Get Ready!”	Chief Referee	Assume the starting position

Signal	Issued by	Meaning
Voice: “Start!” (hand down + voice)	Chief Referee	Begin the attempt
Voice: “Finish!” (hand back + voice)	Chief Referee	End the attempt (Classic / WC)

REFERENCE
Additional Referee Signals for Multirep Dips

Referee's action	Description
Count announcement	After each valid repetition: “One!”, “Two!”, ...
Corrective cues:	The referee may give verbal signals when mistakes are made:
- "Lower!"	insufficient depth (shoulder above elbow)
- "Higher!"	incomplete lock-out
- "Legs!"	leg-position violation
- "Balance!"	body sway or instability
- "Shoulders!"	incorrect shoulder position
Three consecutive errors	Chief Referee commands “Finish!”

REFERENCE
Technical Standard

Position	Requirement
Bottom point	The shoulder must descend to elbow level or lower
Top point	Full elbow extension with stable torso; no “popping” out of lock-out. Shoulders depressed and retracted
Pelvis	Pelvis must descend in sync with shoulders and weight. It is prohibited for shoulders to drop while pelvis and weight remain at the start height (“hanging”), or for the torso to lean markedly forward without pelvic participation
Body	Vertical, stable, no swinging
Movement	Controlled and smooth, without jerks or swings
Weight	Centre of gravity below knee level; no swinging; must not touch the apparatus

Figure: Correct and incorrect shoulder positions at the top of the dip. Figure. Correct and incorrect shoulder positions at the bottom of the dip.	Figure. Correct and incorrect body positions at the bottom of the dip.

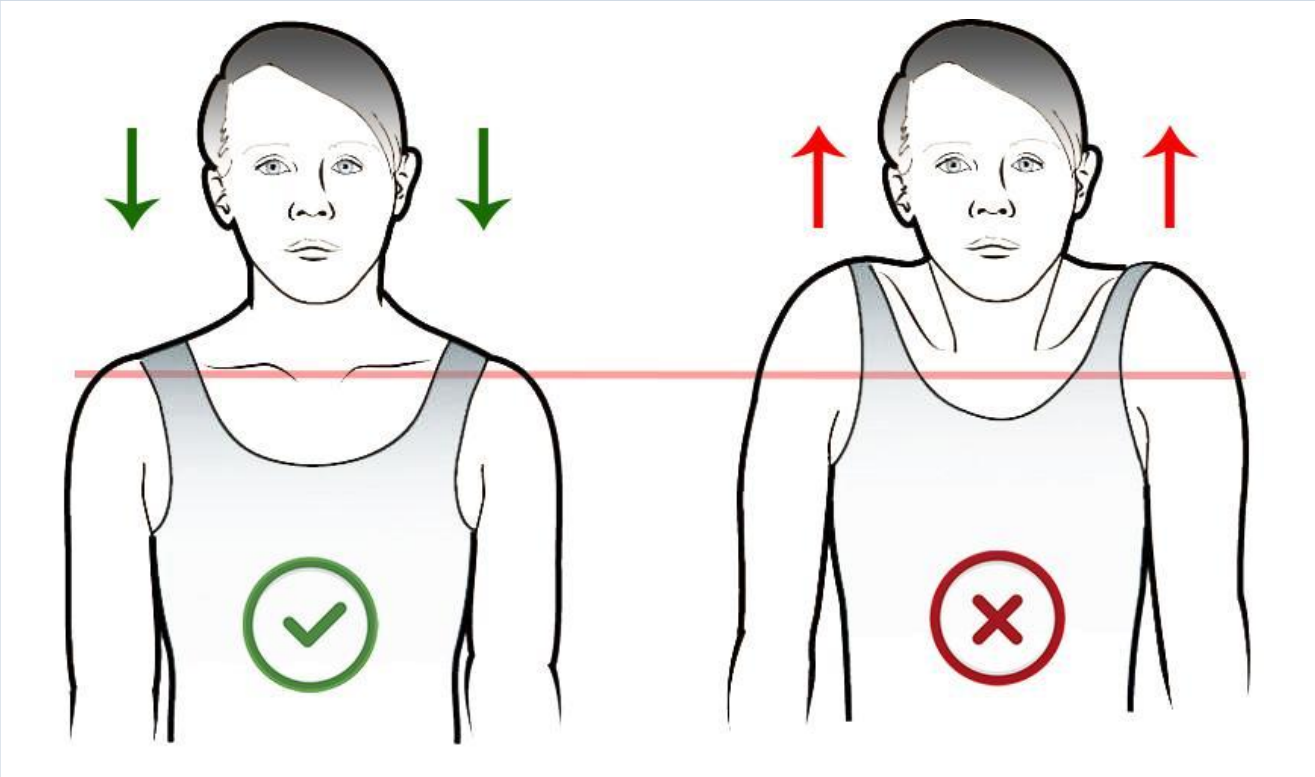

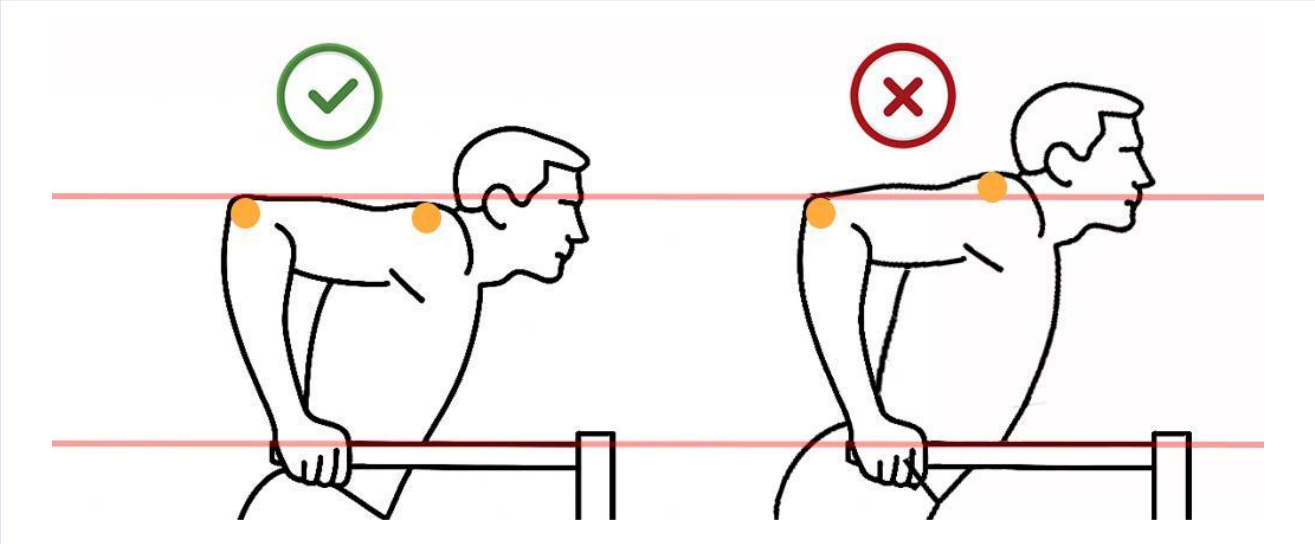

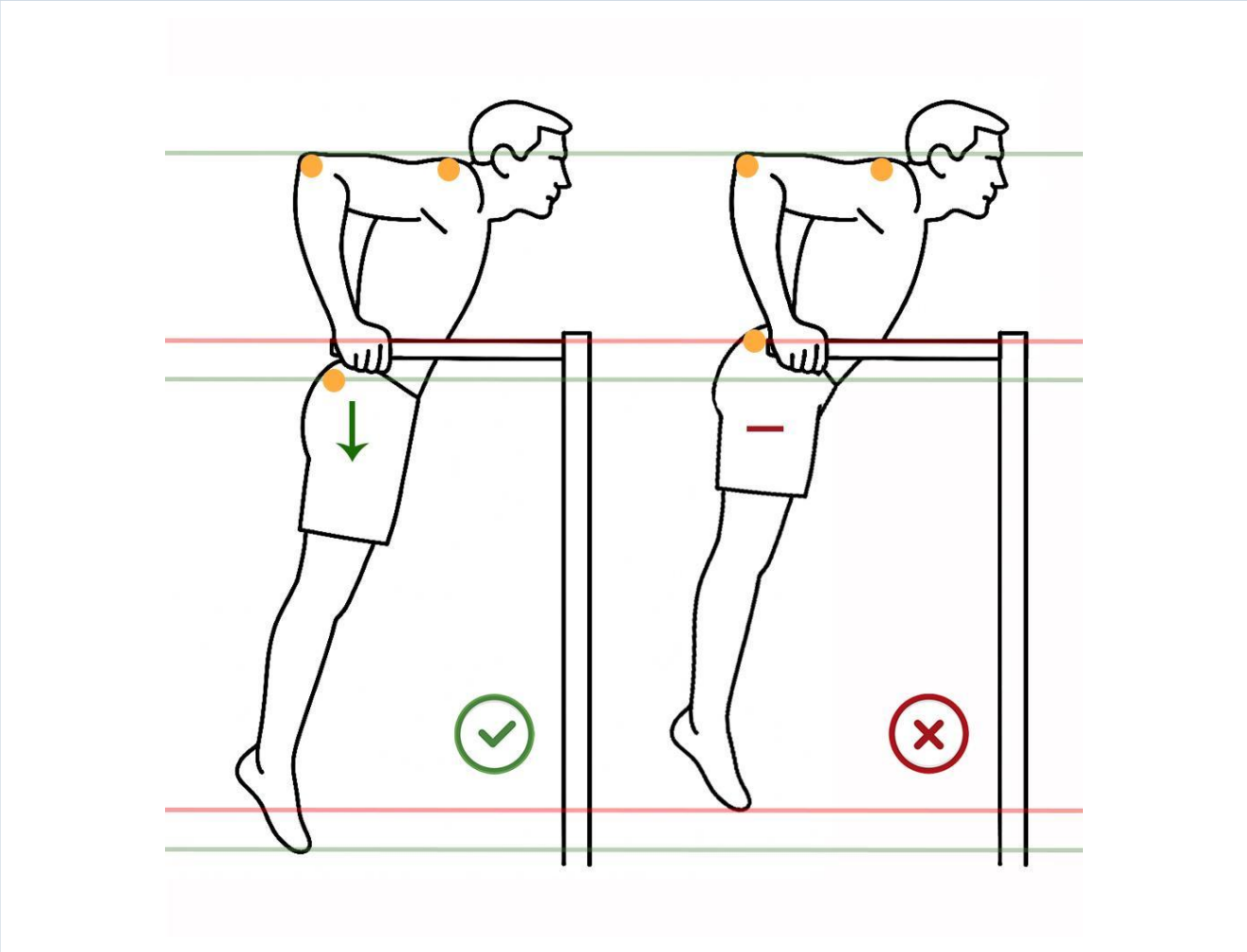

Invalid Attempt (No-Rep)

- Referee-signal violations:
- Continuing the movement after the Chief Referee has stopped a false start (movement before the “Start!” command).
- Finishing the movement before the “Finish!” command (in single-rep formats).
- Depth and amplitude violations:
- Insufficient depth — the shoulder joint stays above the elbow.
- Shoulders drop but the pelvis and the weight remain at the start level (asynchronous descent, “hanging” effect).
- Incomplete arm lock-out at the top — elbows remain bent, no full fixation in the support position;
- Downward movement during the ascent before full elbow lock-out, or double bouncing in the bottom position; a brief pause without downward movement is permitted.
- Technique violations:
- Jerks, swings, kipping or torso rocking.
- Excessive pelvic tilt, spinal hyperextension or leg kick that assists the lift.
- Loss of stability or balance during execution.
- Contact with external objects:
- Touching the floor, platform, equipment or assistants before the “Finish!” command.
- Use of any external support other than the bars themselves.
- Weight violations:
- Dropping of the weight through the athlete’s fault, swinging, or the weight touching the bars, platform, equipment or assistants before “Finish!”.
- Centre of gravity of the weight above knee level (see § 5.2).

- Other violations:
- Ignoring referee commands.
- Any other failure to comply with the technical requirements set out in § 4.2 of these Rules.

Allowed

- Legs slightly bent or straight are permitted, provided the knee angle changes only minimally and there are no jerks, kicks, or swings.
- Paused lock-out in the top support position is allowed, so long as the athlete does not “pop out” of full fixation. Descent speed is not regulated; one change of direction at the bottom is allowed.
- After a false start the Chief Referee stops the athlete and repeats the commands; if the weight dropped through no fault of the athlete (loading error, organizer’s equipment failure, assistant error), a repeat attempt is granted under § 7.4.5; otherwise the attempt is a no-rep.
- Starting with partially bent elbows is acceptable only if the athlete has a prior medical clearance issued in accordance with ISF standards.

4.3 Muscle-Up

NOTE
The Muscle-Up (Bar or Ring) is a specialized discipline used exclusively in the Weighted Calisthenics format. The exercise requires compound strength and coordination. The goal is to clear the bar (or rings) and achieve a full lock-out in the top position.

Event	Format	Repetition	No. of attempts
Men: Bar Muscle-Up	Weighted Calisthenics	1 rep with maximum weight	3
Women: Ring Muscle-Up	Weighted Calisthenics	1 rep with maximum weight	3
Women (optional): Bar Muscle-Up instead of Ring Muscle-Up	Weighted Calisthenics	1 rep with maximum weight	3

REFERENCE
Option for Women

No later than 10 minutes before the planned start of the attempts of the respective weight class, female athletes may, at their sole discretion, request substitution of the Ring Muscle-Up with the Bar Muscle-Up by notifying the Secretary or Technical Controller. This request must be confirmed by the judges, may not be withdrawn once submitted, and applies to all three attempts.

4.3.1 Bar Muscle-Up

REFERENCE
The exercise is performed with additional weight attached to a belt (see § 5.2).

REFERENCE
Starting Position

- Full hang on the bar with arms fully extended (180°);
- Grip: pronated (palms away) or semi-false grip (partial hook without full wrap);
- Body stable, feet pointing down or slightly bent at the knees;
- Center of gravity of the weight must be below knee level.

REFERENCE
General Referee Commands

Signal	Issued by	Meaning
Voice: “[First Name Last Name] is invited to the platform.”	Secretary	Athlete called to the platform
Voice: “Get Ready!”	Chief Referee	Assume the starting position
Voice: “Start!” (hand down + voice)	Chief Referee	Begin the movement
Voice: “Finish!” (hand back + voice)	Chief Referee	Confirm fixation at the top

REFERENCE
Technical Standard

Position	Requirement
Top position	Arms fully locked (180°) above the bar
Movement	Must be executed without jerks or kipping; a forward swing immediately followed by the pull is permitted; a minimal, smooth change of knee and hip angles that gives no advantage is permitted
Control	A pause and visible stability at the top are mandatory

Invalid Attempt (No-Rep)

- Referee-signal violations:
- Continuing the movement after the Chief Referee has stopped a false start (movement before the “Start!” command);
- Ending the attempt before the “Finish!” command.
- Starting position faults:
- Arms not fully extended at the bottom (without an approved medical exemption);
- Use of a false grip (wrist or forearm rests on the bar) — prohibited.
- Failure to reach the position:
- Elbows not fully extended at the top;
- No visible pause or lack of stability in the top position;
- Bar not clearly cleared by the torso (insufficient range of motion).
- Technique faults:
- Use of jerks, kicking, excessive pelvic tilt or spinal hyperextension that helps to clear the bar;
- Loss of balance or coordination during the movement;
- Downward movement during the ascent before lock-out (including “double movement” up–down–up); a brief pause without downward movement is permitted.
- A rapid drop (rebound) after the “Start!” command before initiating the pull.
- Execution errors:
- “Chicken wing” — elbow transitions over the bar one at a time;
- Falling off the bar or grip loss before the “Finish!” signal;
- Touching the platform, equipment, or assistants before the “Finish!” command.
- Other violations:
- Ignoring referee commands;
- Any other breach of the requirements outlined in § 4.3 of these Rules.

Allowed:

- Semi-false grip is allowed if control is maintained;
- Bending the knees is permitted, provided there is no jerking or leg kick;
- Chest touching the bar is not considered an error;
- After a false start the Chief Referee stops the athlete and repeats the commands; if the weight dropped through no fault of the athlete (loading error, organizer’s equipment failure, assistant error), a repeat

attempt is granted under § 7.4.5; otherwise the attempt is a no-rep;

- Starting with partially bent arms is only allowed with a prior medical exemption issued in accordance with ISF standards.

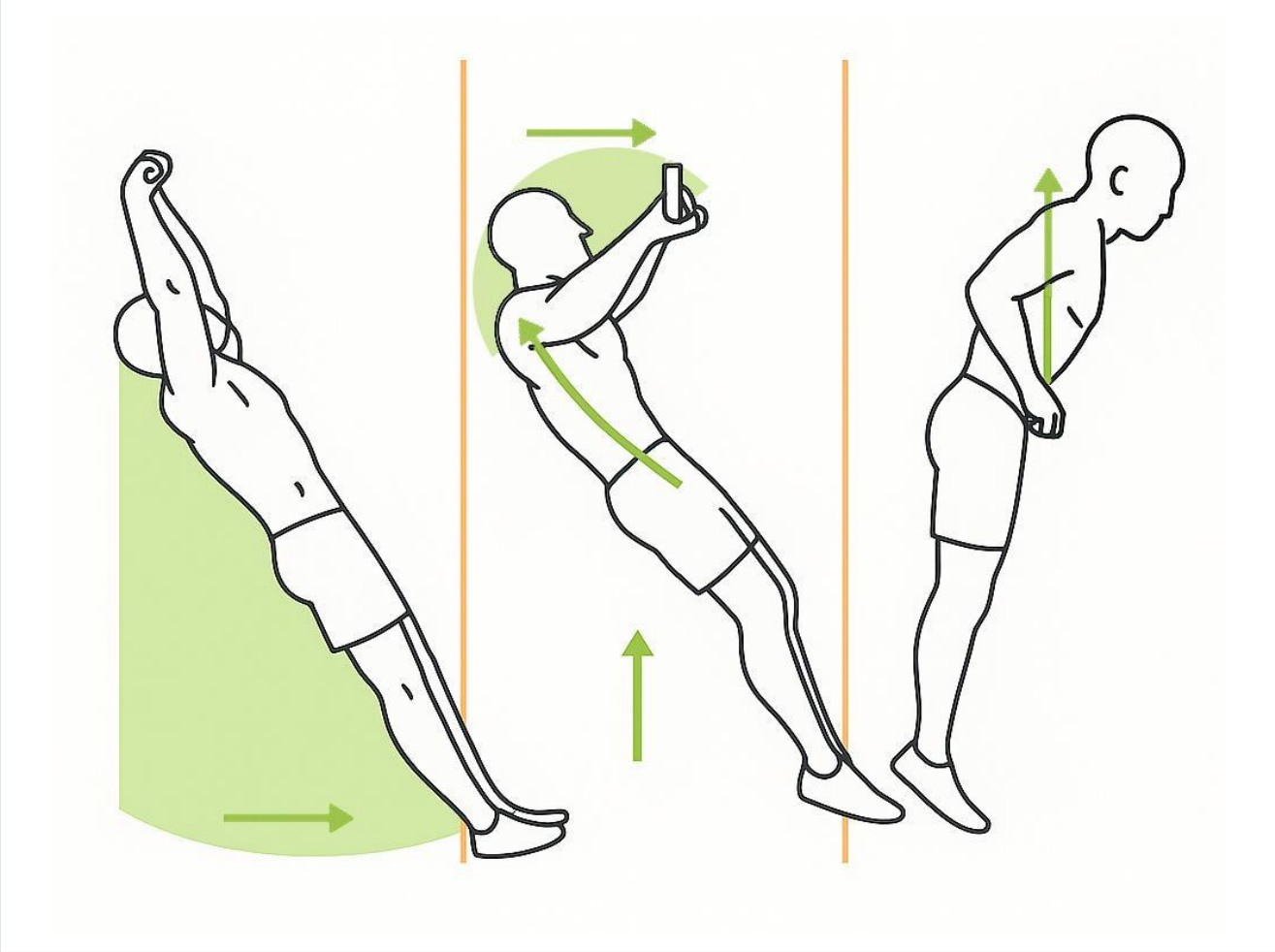

Figure: Execution of Bar Muscle-Up — swing, pull, lock-out above the bar.

4.3.2 Ring Muscle-Up

Performed by female athletes on rings complying with § 6.4. Referee commands and procedure are as in § 4.3.1; the differences are listed below.

Starting position

- Full hang on the rings with arms fully extended (180°), body hanging freely without support on the step-up block;
- False grip is permitted;
- The pull must not be initiated during a swing; at the athlete’s request, spotters may stop the swing;
- The centre of gravity of the weight must be below knee level (§ 5.2).

Top position

- Arms fully extended (180°) above the rings; hold until the “Finish!” command.

Invalid Attempt (No-Rep)

- Failure to get over the rings;
- Starting with bent arms (without an approved medical exemption);
- Jerks, kicking, excessive pelvic tilt or spinal hyperextension that assists the lift;
- Loss of control of the weight or the legs, including after getting over the rings;
- Downward movement of the weight after the ascent has begun and before lock-out (except in the transition phase); a brief pause is permitted;
- A rapid drop of the weight (rebound) after the “Start!” command; a slow, minimal downward movement is permitted;

- Reversing the movement before full elbow extension above the rings;
- “Chicken wing” — elbows getting over the rings one after the other;
- Continuing the movement after the Chief Referee has stopped a false start, returning to the block before the “Finish!” command, or ignoring referee commands.

4.4 Barbell Squats

NOTE
The Barbell Squat is used exclusively in the Weighted Calisthenics discipline. The objective is to perform one repetition with maximum weight, while maintaining proper technique, depth, and fixation.

Event	Format	No. of attempts
Weighted Calisthenics	1 repetition with maximum weight	3

The barbell is positioned on the back—low bar or high bar, at the athlete’s discretion.

REFERENCE
Execution Procedure

- After being called, the athlete racks the barbell onto the back.
- Take the starting position: feet stable, knees locked, torso braced.
- On the “Start!” command — performs one complete repetition.
- Upon full extension, the “Rack!” command is given, and the bar is returned.

REFERENCE
Referees' signals

Signal	Issued by	Meaning
Voice: “[First Name Last Name] is invited to the platform.”	Secretary	Athlete called to the platform
Voice: “Get Ready!”	Chief Referee	Assume the starting position
Voice: “Start!” (hand down + voice)	Chief Referee	Begin the repetition
Voice: “Rack!” (hand back + voice)	Chief Referee	Permission to re-rack the bar

REFERENCE
Technical Standard

Element	Requirement
Depth	The top surface of the thigh at the hip joint must drop below the top of the knee
Control	Full fixation at both the bottom and top positions
Stability	Bar must remain balanced, torso must stay controlled
Load	Bar must not touch the rack, shift position, or be dropped

Invalid Attempt (No-Rep) — Barbell Squat

- Referee signal violations:
- Continuing the movement after the Chief Referee has stopped a false start (movement before the “Start!” command);
- Re-racking the bar before the “Rack!” command.
- Depth violations:
- The top surface of the thigh at the hip joint does not descend below the top of the knee (insufficient depth).

- Double movement:
- Double bouncing in the bottom position;
- Any downward motion while ascending.
- Incomplete fixation:
- Failure to fully extend the knees at the start or end;
- Loss of stability in the top position.
- Foot movement violations:
- Steps forward, backward, or sideways;
- Only minor foot adjustments (heel-to-toe shift) are permitted without changing stance.
- Spotter interference:
- The spotters take the bar because the athlete cannot complete the lift (for safety or at the athlete's request), or the athlete receives any support that aids the lift;
- If the spotters touch the bar or the athlete by mistake between the "Start!" and "Rack!" commands and this hinders or aids the lift, the attempt is not counted, but a repeat attempt is granted under § 7.4.5 (as in the IPF).
- Self-assistance:
- Bracing the elbows or forearms against the legs;
- Light contact is permitted, but not to assist the movement.
- Dangerous behavior:
- Throwing or dropping the barbell onto the platform (even after a completed lift);
- This results in disqualification of the athlete from the competition; further sanctions are determined by the ISF Disciplinary Commission upon the Jury's referral. Exception: a proven injury that directly caused the bar to drop.
- Other errors:
- Any other failure to comply with the technical requirements outlined in § 4.4 of these Rules.

Allowed:

- Any safe grip type;
- Any stance width;
- Minor foot movements (without changing position);
- Spotters may assist only after the "Rack!" command.

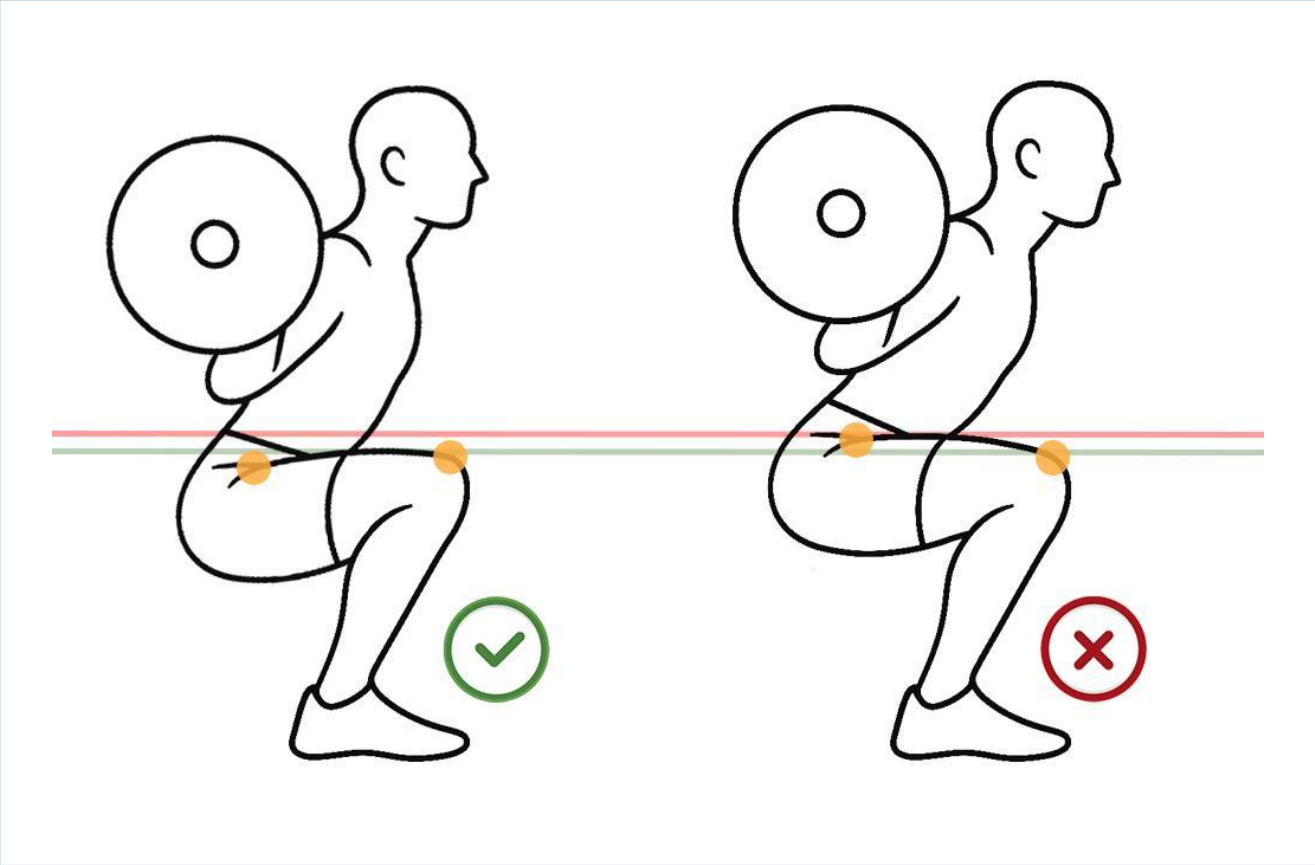

Figure: Correct vs. incorrect body position at the bottom of the squat. The top surface of the thigh at the hip joint must descend below the top of the knee.

SECTION 5. EQUIPMENT AND ELIGIBILITY

International Streetlifting Federation

5

This section defines the requirements for athlete equipment, appearance, permitted accessories, and conditions for participation in competitions held under the auspices of the International Streetlifting Federation (ISF). It applies to all disciplines: Classic Streetlifting, Multirep Streetlifting, and Weighted Calisthenics.

5.1 General Apparel Requirements

- Athletes must compete in clean and proper attire that complies with competition standards.





- The required clothing elements include:
- A t-shirt or rashguard (short-sleeved or sleeveless, except as provided in Section 5.1.1);
- Sport shorts, leggings, or a singlet;
- Sport-type shoes with a rigid sole.
- The clothing must allow visual control of technique, especially during dips and squats:
- The hip crease must be clearly visible;
- The shirt must be tucked into the shorts/singlet or tightly fitted to the torso;
- It is recommended to wear tight-fitting leggings, compression shorts, or a wrestling singlet.
- Clothing must not restrict movement or obscure fixation in key control points (elbows, shoulders, hips, knees).

5.1.1. Clothing for Religious Reasons

Athletes who need to cover their bodies for religious reasons may compete in close-fitting sports clothing with long sleeves and full-length leg coverage, including a rashguard, leggings or a one-piece sports suit.

Such clothing must allow referees to clearly assess the positions of the shoulder, elbow, hip and knee joints, movement depth and lockout. Exposed skin in these areas is not required.

The clothing must not contain rigid inserts or reinforcing elements, or provide additional mechanical support during the exercises.

A sports hijab or other religious head covering is permitted, provided it is securely fastened, leaves the face uncovered and does not present a risk of catching on equipment.

Compliance with these requirements is checked as part of the normal equipment inspection. All other exercise technique and safety requirements remain unchanged.

5.2 Weights and Belts

In all weighted exercises (excluding the barbell squat), external load must be attached to a specialized weight belt using a non-elastic textile or synthetic strap (webbing).

The recommended setup includes a daisy chain strap and proper carabiner fixation, ensuring full safety during performance.

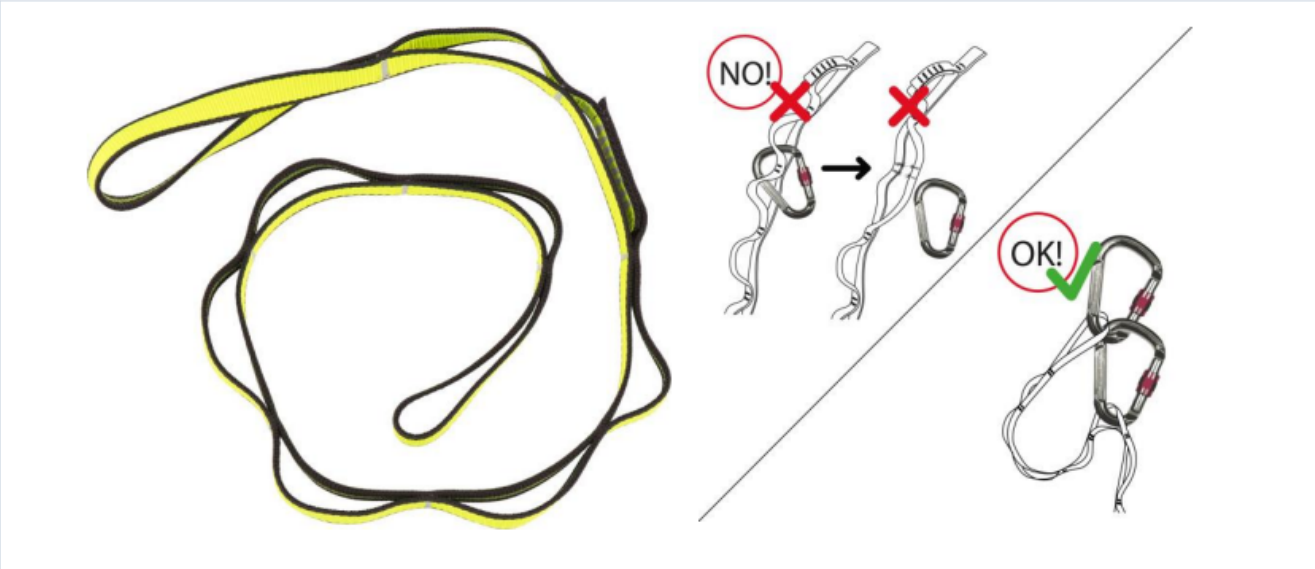

REFERENCE
Basic Requirements

- The belt must be securely fixed to the athlete’s body, must not interfere with movement, and must ensure safety.
- All elements of the load system — belt, carabiners, straps, and connectors — must be intact, factory-made, and show no signs of wear or damage.

REFERENCE
Load Placement

- The center of gravity of the suspended weight must be below the knee level in the starting position (hang/support).
- The weight must remain stable throughout the movement: no swinging, twisting, or shifting is allowed.

REFERENCE
Permitted Load Types

- Standard weight plates (for Classic Streetlifting and Weighted Calisthenics) and kettlebells (for Multirep);
- The load may be attached only with a non-elastic textile or synthetic strap (webbing); cables, chains, resistance bands, rubberized straps, shock absorbers, or similar are prohibited;
- The load must hang stably — no wobbling or sideways movement allowed.

REFERENCE
Prohibited

- Use of chains or cables of any kind;
- Unstable or improvised constructions;
- Hybrid setups involving non-standard components (e.g., weights inside a backpack, chains, clothing-mounted systems, etc.).

5.3 Accessories and Supportive Gear

The use of accessories is permitted only if they do not distort exercise technique, do not obscure key control points, do not provide an unfair advantage, and fully comply with ISF standards.

REFERENCE
Sport Belt (Weight Belt / Support Belt)

- Mandatory in all exercises involving additional weight (except barbell squat) — the weight is attached to this belt;
- In barbell squats, the belt may be used for lumbar support (as a lifting belt), without load attachment;
- Must fit snugly around the waist — not ride up to the ribs or slide onto the pelvis;
- All fastening components (carabiners, straps) must be secure, undamaged, and factory-made.

REFERENCE
Allowed

- Wrist wraps: up to 1 m long and 8 cm wide, worn on the wrists only, without loops for the thumb or fingers or rigid fastening;
- Elbow and knee sleeves: cylindrical, neoprene (a non-supportive fabric layer over the neoprene is allowed), max 7 mm thick and 30 cm long, without inserts or modifications; worn only over the elbows or knees; may not be combined with wraps on the same joint;
- Socks and stockings: permitted, as long as they do not cover the knees;
- Chalk: dry chalk only. Liquid, spray, wax, or cream forms are prohibited;
- Tape: allowed only in case of injury, with the Chief Referee’s permission, and only if it does not enhance grip on the bar or equipment; in the Ring Muscle-Up, preventive tape on the wrists and forearms is allowed.

REFERENCE
Prohibited

- Grips: of any design, including those with loops, clips, carabiners, or Velcro;
- Chains, cables, elastic bands, resistance cords, shock absorbers as part of the belt or weight system;
- Gloves, palm protectors, lifting hooks, straps, or pulling aids;
- Compression gear with hard support: powerlifting suits, elbow and knee wraps;
- Lubricants, creams, waxes, sprays, or films for hands, body, apparatus, or equipment (chalk excepted);
- Tapes that cover key technical control areas: elbows, knees, shoulders, pelvis;
- Any foreign objects (cloth, rubber, plastic, etc.) placed under or over the uniform, if they:
- artificially stabilize joints;
- alter body position on the apparatus;
- conceal or support fixation zones (pelvis, knees, elbows, shoulders);
- serve as padding between body and apparatus (e.g., towel under belt, foam under bars, etc.).

REFERENCE
The Chief Referee makes the final decision on any disputed gear prior to the athlete entering the platform.

Manufacturer review procedures and the application checklist are published at https://streetlifting.pro/equipment/approval/ and https://streetlifting.pro/apply/equipment/. Technical requirements are summarized at https://streetlifting.pro/equipment/standards/. These resources do not replace the requirements of this Section or the personal equipment inspection under § 5.6.

5.4 Identification and Advertising

REFERENCE
Name and Flag Placement

- At the discretion of the organizers, athletes may display their last name and national/federation flag on their apparel (singlet, rashguard, shorts);
- Front (chest or thigh): each element (name or flag) must not exceed 10×10 cm;
- Back: total area for name and flag must not exceed 10×25 cm.

REFERENCE
Sponsor Logos

- Up to two sponsor or brand logos may be displayed on the athlete’s outfit;
- Each logo must not exceed 10×10 cm;
- Logos must not include political, religious, discriminatory, or otherwise inappropriate content;
- Logos must not cover key visual control points (shoulders, elbows, pelvis, knees).

REFERENCE
Prohibited

- Any text or imagery that contradicts the ISF Charter, the principles of sport, or anti-doping regulations;
- Covering critical technical zones with sponsor patches or decorative elements that interfere with refereeing.

5.5 Anti-Doping & Medical Clearance

REFERENCE
Personal Responsibility

Every athlete competing under ISF regulations bears full personal responsibility for:

- Complying with anti-doping regulations (in accordance with the WADA Code);
- Possessing a valid medical clearance for strength-based physical activity.

ISF and event organizers do not routinely check medical certificates but reserve the right to request them with prior notice or in special circumstances.

REFERENCE
Declaration

Before the competition, each athlete must sign an official declaration confirming that:

- They do not use prohibited substances or methods;
- They accept full responsibility for any substances entering their body;
- They are familiar with anti-doping rules and procedures;
- They possess valid medical clearance and accept all health-related risks associated with participation.

REFERENCE
Therapeutic Use Exemptions (TUE)

If the athlete is taking prohibited substances for medical reasons, they are required to:

- Hold an official Therapeutic Use Exemption (TUE) certificate;
- Provide the TUE certificate to event organizers or the ISF Anti-Doping Commission upon request.

5.6 Equipment Check

Equipment checks may be conducted:

- Before entering the platform (at the discretion of referees or organizers);
- After an attempt (if a violation is suspected).

The following elements are subject to inspection:

- Athlete’s attire (compliance with § 5.1);
- Belt and weight attachment system (compliance with § 5.2);
- Accessories and supportive gear (compliance with § 5.3);

- Presence of prohibited items, padding, concealed modifications, etc.

If any item of equipment raises concern, the Chief Referee has the final authority to approve or reject it.

In the event of violations:

- The attempt is not counted (including retroactively if the violation is detected after the attempt);
- Intentional use of prohibited equipment after a warning results in disqualification from the competition.

SECTION 6. EQUIPMENT AND SPECIFICATIONS

International Streetlifting Federation

6

6.1 General Equipment Requirements

- ISF competition equipment includes fixed structures (pull-up bar, dip bars, platform, step-up blocks, rings, squat rack with barbell, weight-loading assistance devices, referee signaling system, and timer) and additional implements such as weight plates and kettlebells, which are an integral part of the competition process.
- All equipment, including plates and kettlebells, must comply with the safety and technical standards of the current version of the ISF Rules, ensuring safe and fair conditions for all athletes.
- Fixed equipment must be securely anchored to the platform or otherwise installed to prevent any shifting or detachment during use.
- All structural elements must be rigidly connected to form a unified, stable and solid system.
- During exercise execution, the parameters of the equipment—including weight of plates and kettlebells—must not change, and no element shall move or shift (except authorized weight-loading mechanisms).
- All equipment must be made from durable materials such as steel or aluminum and must be free of sharp edges or surfaces that could pose a safety hazard.
- Before the start of the competition, all equipment—including weight plates and kettlebells—must be inspected by the Technical Controller to verify full compliance with the current version of the ISF Rules.

6.2 Pull-Up Bar Specifications

- Height: 2200 mm to 2800 mm from the platform surface (measured from platform level);
- Width: Minimum 1200 mm;
- Diameter: 28 mm to 34 mm;
- Material: Steel only; no rubber or synthetic coatings that may affect grip;
- Surface: Smooth and untextured to ensure uniform grip conditions for all athletes;
- Mounting: fixed, eliminating backlash, wobble or other structural instabilities.
- Alignment: The bar must be strictly parallel to the platform surface to avoid technical distortion.

6.3 Dip Bar Specifications (Dip Bars)

- Types of Bars: Both parallel and V-shaped bars are permitted.
- Height: 1500 mm to 1700 mm from the platform surface.
- Distance Between Bars:
- For parallel bars: 450 mm to 600 mm. Grip width must be adjustable within this range in steps of up to 50 mm.
- For V-shaped bars: the angle between the bars must be 10–15 degrees; the width at the grip zone must be within 450–600 mm.
- Diameter: 45 mm to 60 mm.
- Usable Surface Length: Minimum 500 mm.
- Surface Coating: Bare metal or powder-coated metal only. No additional coverings or overlays that alter grip are allowed.
- Base Stability: The structure must be stable and prevent any shifting or tipping during use.

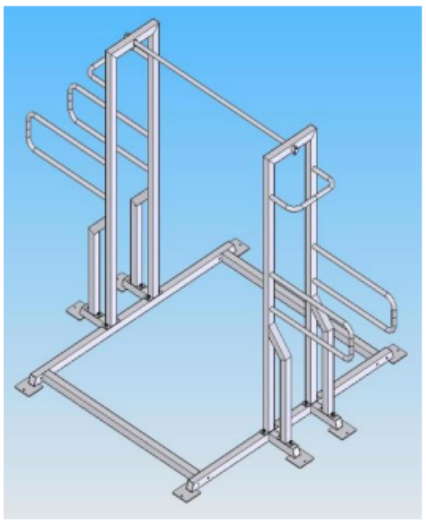

Рис.8.1 Разборный комплекс

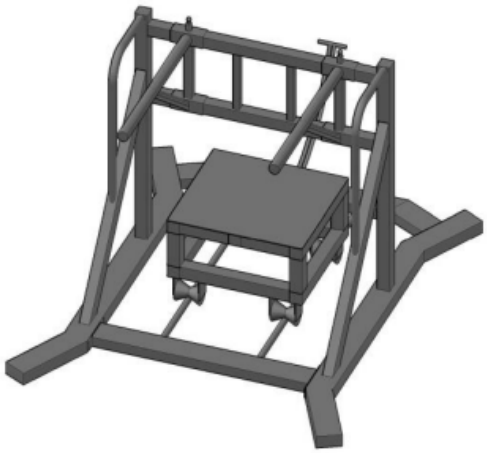

Рис. 8.2 Брусья с регулировкой по ширине

Fig. 6.1 Standard Disassemblable Setup Fig. 6.2 Adjustable Parallel Bars (Width Regulation)

6.4 Ring Requirements

Rings are used in the Ring Muscle-Up discipline for women and must be provided by the competition organizer. Rings and straps must meet the following requirements:

- Ring diameter: 18 cm
- Ring thickness: 2.8 cm
- Material: wood
- Strap length: 4.5 m
- Strap width: 3.8 cm
- Load capacity (ring + strap): at least 300 kg per side.

6.5 Requirements for the Squat Rack (Squat Rack)

The squat rack is used in the Barbell Squat exercise and must ensure safe and stable performance:

- Construction: welded steel structure with powder coating
- Adjustable support height: from 900 mm to 1600 mm above the platform surface
- Distance between supports: from 800 mm to 1200 mm
- Maximum load capacity: at least 1000 kg
- Support fixation: reliable locking elements (pins or clips)
- Connection to the uprights: eliminates play and shifting when racking and unracking the barbell
- Stability: the rack must be firmly secured to the platform and not allow vibrations
- Barbell and plates for the squat: Olympic bar, 20 kg, 220 cm long, 50 mm sleeve diameter; metal or rubber-coated calibrated plates, tolerance ±0.5% of nominal weight; collars mandatory, minimum 2.5 kg per pair.

6.6 Requirements for Weight Plates

Weight plates are used for resistance in exercises such as pull-ups and dips and are a core element of ISF equipment. They must meet the following standards:

- Weight: Plates must be calibrated with a tolerance of ±10 grams from the declared weight (e.g. 5 kg, 10 kg, 15 kg, 20 kg, 25 kg). For record attempts, lighter plates may be used to exceed the current record by 0.5 kg or more.
- Material: Metal or rubber-coated plates, ensuring durability and safety.
- Dimensions:
- Plate thickness: no more than 7 cm for plates of 25 kg and above; no more than 6 cm for plates of 20 kg or less.

- Center hole diameter: must be sufficient for threading a strap with carabiner for belt attachment (typically 50 mm).
- Color Coding (recommended for quick identification):
- 5 kg — White
- 10 kg — Green
- 15 kg — Yellow
- 20 kg — Blue
- 25 kg — Red
- Condition: Plates must be intact, free from chips, cracks, or other defects that may affect safety or weight accuracy.
- Usage: Plates are attached to the athlete’s belt via straps and carabiners, ensuring balanced weight distribution.



6.7 Requirements for Kettlebells

Kettlebells are used in Multirep Streetlifting disciplines and must comply with strict ISF standards:

- Weight: Kettlebells must be calibrated with a tolerance of ±100 grams from the nominal weight (e.g. 8 kg, 12 kg, 16 kg, 24 kg, 32 kg, 48 kg).
- Material: Solid metal construction to ensure uniformity and durability.
- Color Coding (recommended for quick identification):
- 8 kg — Pink
- 12 kg — Blue
- 16 kg — Yellow
- 24 kg — Green
- 32 kg — Red
- 48 kg — Gold
- Condition: Kettlebells must be intact—free from cracks, chips, or any defects that could compromise safety or ergonomics.
- Shape and Dimensions: Must comply with international kettlebell sport standards to ensure uniformity and grip consistency.
- Usage: Kettlebells are used in high-repetition exercises and may be attached to the athlete’s belt in the same way as weight plates.

6.8 Equipment Certification

- At international competitions only ISF-approved equipment, including plates and kettlebells, may be used: it must meet the requirements of this Section and pass inspection under § 6.9. The list of ISF-approved equipment is published on streetlifting.pro.
- Approval applies in particular to:
- pull-up and dip stations, including modular units;
- dip bars, including adjustable-width bars (§ 6.3);
- plates and kettlebells.
- At national and local competitions, in the absence of ISF-approved equipment, equivalent alternatives may be used, provided they are inspected and approved by the appointed Technical Controller.

The ISF equipment register is published at https://streetlifting.pro/equipment/. Organizers must verify the exact model, approved scope, validity and applicable restrictions against the relevant ISF decision. Technical requirements and the approval procedure are available at https://streetlifting.pro/equipment/standards/ and https://streetlifting.pro/equipment/approval/. Inclusion in the register does not replace inspection under § 6.9. The national and local equivalence provision in this Section remains applicable.

6.9 Equipment Inspection and Approval

- All equipment, including plates and kettlebells, must be inspected by the Technical Controller appointed by ISF or the event organizers prior to the competition.
- In case of damage, wear, or non-compliance with standards, the equipment may be replaced with an ISF-approved equivalent.
- Inspection results are recorded in an official report signed by both the Technical Controller and a representative of the organizing committee.
- All equipment—including plates and kettlebells—must be available to athletes for warm-up and familiarization before platform performance.

6.10 Platform Requirements

- Dimensions: Minimum 2×2 meters (2.5×2.5 meters recommended).
- Surface: Wood or composite material with a non-slip coating.
- Thickness: At least 3 cm.
- The platform must be stable and provide safe execution of exercises involving plates and kettlebells.

6.11 Step-Up Blocks

- Height: 40 to 75 cm
- Width and depth: At least 50 cm
- Material: Wood or metal with a non-slip surface
- Load capacity: Must withstand over 300 kg (including athlete and weights)
- Step-up blocks are used to assist in weight loading, to assume the starting position, and to ensure a safe finish of the exercise.

6.12 Weight-Loading Assistance Devices

- Special devices—such as lever-based mechanisms or dedicated platforms—are allowed to simplify the loading, setup, or unloading of weights (plates and kettlebells).
- Such devices may be part of the modular station or stand-alone tools.
- Primary requirement: Ensure athlete safety during exercise execution.

6.13 Referee Signaling System and Timer

- All competitions must feature a visual and audio signaling system for attempt evaluation. The system must include:
- Display panel with three white and three red indicators
- Judge panels (three units), each with buttons for white, red, and sound signals
- Two-tone sound signal

- If the system is unavailable, flags or cards (white and red) are used
- Timer (stopwatch) for tracking time limits for platform entry and start of the lift
- The scoreboard and timer must be positioned at a height and angle clearly visible to all referees, the secretary, the jury, participating athletes, and the audience.

6.14 General Safety Standards

- All equipment—including plates and kettlebells—must comply with ISF safety standards.
- Organizers must provide access to equipment for pre-checks by the Technical Controller to verify compliance.
- Referees and organizers are responsible for ongoing inspection and verification of equipment condition before and during the competition.

6.15 Final Provisions

- All equipment used in ISF competitions—including plates and kettlebells—must meet the requirements outlined in this section.
- Event organizers are responsible for ensuring the availability, functionality, and compliance of all equipment with the current version of the ISF Rules.
- In case of non-compliance, the competition may be paused until issues are resolved.
- Organizers are liable for any incidents arising from defective or non-compliant equipment, including plates and kettlebells.

Notes:

- Detailed technical drawings and specifications of ISF-approved equipment, including plates and kettlebells, will be provided in Appendix E of these Rules (published separately).
- All changes or additions to equipment standards must be approved by ISF no later than 30 days prior to the event.

SECTION 7. COMPETITION PROCEDURES

International Streetlifting Federation

7

This section outlines the organizational and procedural aspects of ISF competitions. It governs eligibility, weigh-in, platform protocol, scoring, jury procedures, appeals, and awards. All ISF events must be held in accordance with the official Competition Regulation approved by the organizer and endorsed by ISF (or the relevant national federation).

7.1 Athlete Eligibility and Registration

7.1.1 General Eligibility

- Athletes aged 13 or older on the date of competition are eligible to participate in ISF tournaments (see § 3.1).
- Each athlete must be registered within the deadlines set by the organizer—either online or on-site, depending on the Competition Regulation.
- Registration is only valid upon confirmation of the following:
- Agreement with ISF Rules;
- Selection of sport division;
- Completion of the official weigh-in procedure;
- Completion and signature of the official Athlete Declaration (see § 5.5).

7.1.2 Medical Clearance and Anti-Doping Responsibility

- Each participant is personally responsible for:
- Possessing a valid medical clearance for strength training;
- Complying with anti-doping requirements (see § 5.5).
- A medical certificate is not required at registration, but may be requested by organizers in advance or in justified cases.
- Minors (under 18 years old) must submit written consent from a parent or legal guardian, prepared in the approved format.
- If the athlete holds a Therapeutic Use Exemption (TUE), they must present the relevant documentation to the organizer or ISF Anti-Doping Commission upon request.

7.1.3 Categories, Divisions, and Cross-Scoring

- During registration, each athlete must indicate:
- Age group;
- Weight category (based on official weigh-in, see § 7.2);
- Sport division: Amateur, Pro, or Adaptive (see § 3.5);
- Participation in all-around (if included in the competition program);
- Need for cross-scoring (dual scoring across categories).
- If cross-scoring is requested (e.g., simultaneous participation in both age and open categories, or in all-around and single events), the athlete must declare this at the time of registration.
- If multiple events entered by the athlete take place on the same day, then:
- Repeating the lift is not permitted;
- The result is automatically counted toward both categories.
- If the category competitions take place on different days, the athlete must perform the exercise again for each category or event.
- In the event of errors or violations regarding category or division, the organizer reserves the right to:
- Transfer the athlete to the correct scoring categories;

- Nullify the result;
- Or disqualify the athlete in case of a serious breach.

7.1.4 Registration Confirmation

- Registration is considered complete only after:
- Completion of the registration process;
- Submission of all required documents;
- Receiving official clearance from the competition secretariat.
- Only then is the athlete added to the official start list and allowed to compete.

7.2 Athlete Weigh-In Procedure

7.2.1 General Provisions

Weigh-in is a mandatory procedure for competition entry and must be conducted before the start of the athlete's group (see § 7.2.3) in accordance with the approved schedule.

Each athlete must appear in person at the designated time for their group.

The weigh-in protocol must record:

- Full name of the athlete;
- Bodyweight (accurate to 0.1 kg);
- Sport discipline, event, and division;
- Assigned categories (age, bodyweight, and sex).

7.2.2 Weigh-In Format

Weigh-in is conducted:

- In a private room, without unauthorized persons;
- In the presence of at least two officials, including a referee and an organizing committee representative (or secretary).

Permitted:

- A representative of the same sex may accompany the athlete upon request;
- Weigh-in may be performed in underwear or fully nude — at the athlete's discretion (for accuracy).

The athlete must present:

- Valid identification;
- Medical clearance (upon request);
- Declaration of division (Amateur / Pro / Adaptive), if applicable.

7.2.3 Timeframe

Official weigh-in must take place no earlier than 24 hours and no later than 2 hours before the start of the competition group.

The organizers must:

- Inform all athletes of the weigh-in time at least 24 hours before the event;
- Provide at least 1.5 hours of weigh-in time per competition group;
- If there are many athletes, organize multiple weigh-in streams or additional sessions.

Evening weigh-in on the day before the event is allowed if stated in the Competition Regulation.

7.2.4 Procedure and Limits

The athlete's bodyweight must not exceed the upper limit of the declared category.

For example: In the up to 75 kg category, the maximum allowed weight is 75.00 kg.

If the limit is exceeded:

- The athlete may re-weigh any number of times, in turn and only within the group's weigh-in window (§ 7.2.3);

If the weight still exceeds the limit:

- The athlete is moved to the next heavier category (if provided for in the Competition Regulations);
- Or disqualified from the event (if no suitable category exists).

7.2.5 Confidentiality and Fairness

All weigh-in procedures are conducted with respect for personal privacy and in a secure environment.

Results are not published publicly without athlete consent, except for the category and bodyweight listed in the official start protocol.

Weigh-in must be conducted on certified scales, verified for accuracy prior to use.

7.2.6 Special Cases

- In case of cross-scoring, the athlete is weighed once, and that weight applies across all categories.
- Adaptive division athletes may receive special weigh-in conditions upon verified medical request.
- If an athlete competes in multiple disciplines on the same day, only one weigh-in is required.
- If competing in both Pro and Amateur divisions, the weight is recorded once during the main weigh-in procedure.

7.3 Platform Access & Equipment Check

This section governs the procedure for admitting athletes to the platform (or stage), the list of authorized officials involved in the process, and the rules for interaction between the athlete, assistants, and referees.

7.3.1 Equipment Inspection

Before each attempt, the Chief Referee or an authorized ISF representative must visually verify:

- Correct placement and secure fastening of the weight (see § 5.2);
- Compliance of the outfit with ISF standards (see § 5.1);
- Clean hands and use of dry chalk only (see § 5.3);
- Absence of prohibited items (grips, straps, padding, etc.).

If the athlete’s gear is non-compliant, they must correct it before entering the platform. Otherwise, the attempt is not counted (including retroactively if the violation is detected after the attempt); intentional use of prohibited equipment after a warning results in disqualification from the competition (see § 5.6).

7.3.2 Athlete Appearance

The athlete must:

- Compete in clean and appropriate athletic attire (see § 5.1);
- Not wear unauthorized logos, slogans, or provocative symbols;
- Keep long hair tied back if it obstructs referee visibility.

Apparel may include national, club, sponsor, or federation branding only in accordance with ISF guidelines.

7.3.3 Attempt Authorization

Only athletes who meet all of the following conditions may access the platform:

- Are listed in the official start protocol and within their registered weight and age category;
- Have passed the weigh-in (see § 7.2);
- Wear compliant equipment and clothing;
- Have been called by the Secretary: “[Full Name] is invited to the platform.”

Entry to the platform is prohibited without a formal call or referee readiness.

7.3.4 Platform Personnel

During an attempt, the following individuals are the only ones allowed on the platform:

- The athlete;
- The Chief Referee and Side Referees;
- 2 to 3 spotters (assistants).

Other persons (coaches, photographers, media, tech staff) may remain only in designated zones off the platform, with prior approval from the Chief Referee or Jury.

7.3.5 Coach Zone & Conduct

Coaches and support personnel:

- Must remain in the designated coach zone near the platform;
- May give visual or verbal cues to the athlete;
- May not interfere with referees, assistants, or secretariat operations.

Violation of these boundaries may result in the coach being removed from the competition area.

7.3.6 Role of Spotters

Spotters (2 to 3 individuals) are responsible for:

- Assisting with weight setup and suspension;
- Monitoring athlete safety during the attempt;
- Cleaning the platform and equipment when signaled by the referee (sanitizer required);
- Not touching the athlete between the “Start!” and “Finish!” signals.

NOTE
Exception: Assistance is allowed in case of injury risk—either upon the referee’s signal or at the athlete’s request.

If a spotter error affects the result, the Chief Referee grants a repeat attempt under § 7.4.5 (or the Jury, on appeal).

7.4 Draw & Order of Performance

7.4.1 General Principles

The order of attempts is determined to ensure fairness, safety, and competition logistics. Organizers must follow the procedures outlined in this section when forming groups and determining attempt order.

7.4.2 Group Formation

- One group may include up to 20 athletes.
- If more than 20 athletes are registered, they are split into multiple groups with even distribution.
- All athletes in a group perform the same exercise.
- Groups are formed in ascending order of weight category and declared starting weights.
- The lightest categories and lowest starting weights form the first group (Group A).

In Classic and Multirep (Two-discipline format):

- Group 1 performs three attempts of the first exercise (one attempt in Multirep);
- While Group 2 competes in the first exercise, Group 1 warms up for the second;
- Then Group 1 performs the second exercise, and so on.

If only one group is present, a 30-minute break is required between exercises or the break must include another discipline’s block.

7.4.3 Draw and Attempt Sequence

Within each group:

- Attempts proceed in ascending order of declared weight.
- In case of equal declared weight, the athlete with the lower bodyweight lifts first.
- If both weight and bodyweight are equal, the earlier declaration takes precedence.

7.4.4 Round System

- Classic & Weighted Calisthenics: 3 rounds (for 3 attempts).
- Multirep: 1 round (2-minute timed attempt).
- Within each round, athletes perform attempts in ascending weight order.
- Technical pauses are given between rounds for weight adjustment and equipment setup.

7.4.5 Weight Errors & Equipment Malfunction

If a weight or equipment issue occurs:

- Before the attempt: the athlete continues after correction;
- During the attempt (loading error, organizer's equipment failure, assistant error): the Chief Referee grants a repeat attempt at the end of the round; if it is not granted, the Jury may grant it on appeal on the same grounds (§ 7.9.6);
- If the athlete was the last in the round: they receive an extra +5 min; second-to-last gets +4 min, and so on.

7.4.6 Weight Change Protocol

The procedure for declaring and changing weights is set out in § 7.6.

7.4.7 Extra Record Attempts (4th Attempt)

- Performed after Round 3 — for record purposes only, only in Classic Streetlifting, only with Jury approval, after a successful 3rd attempt and with a weight of at least the current record + 0.5 kg (§ 10.3); not counted toward the total (see § 7.7.4);
- Require separate validation and are registered according to protocol (see § 9.4).

7.5 Time & Breaks

7.5.1 Attempt Time Limit

The time allocated for each attempt depends on the competition format:

Event	Time Limit
Classic Streetlifting	1 minute
Weighted Calisthenics	1 minute
Multirep Streetlifting	2 minutes

REFERENCE
The 1-minute clock starts when the athlete is called and the weight is loaded and announced (one countdown, as in the IPF). If, within 1 minute, the athlete has not taken the start position ready for the "Start!" command, the attempt is considered invalid (No-Rep). After the "Start!" command the 1-minute limit no longer applies; in Multirep the 2-minute set runs from the "Start!" command.

7.5.2 Breaks for Small Groups

If a group has fewer than 10 athletes, a unified recovery break is introduced after the completion of each round:

Break Time = (10 – number of athletes) × 1 minute

Examples:

- 9 athletes → 1-minute break
- 7 athletes → 3-minute break
- 4 athletes → 6-minute break
- The break starts after the final attempt of the round.
- The Secretary announces the start of the timer and ensures compliance.
- One minute before resumption: the Secretary announces "One-minute warning!".
- After the break:
- The next weight is loaded;
- The first athlete has 1 minute to prepare.

7.6 Attempts Submission & Changes

7.6.1 Submission of Attempts

- The first attempt in each exercise is submitted during registration or the official draw.
- The second and third attempts must be submitted within 1 minute after the previous attempt is completed.

NOTE
If no submission is made in time

- After a successful attempt → the weight is automatically increased by the minimum increment (1.25 kg; 2.5 kg in the Barbell Squat).
- After a failed attempt → the previously declared weight is repeated.

NOTE
Responsibility for submitting attempts lies with the athlete or their coach.

7.6.2 Attempt Changes

Round 1:

- One change allowed (increase or decrease);
- Must be made no later than 5 minutes before the group begins;
- The Secretary announces “1 minute remaining for changes.”

Round 2:

- No changes allowed;
- The weight is fixed based on the submission within the 1-minute window.

Round 3:

- Up to two changes allowed (increase or decrease), but not below the previous attempt or the weight already loaded in the current round;
- Permitted only if the athlete has not yet been called to the platform at the previous weight.

7.6.3 Weight Restrictions

- The declared weight must not be lower than in previous attempts (regardless of success or failure); the weight on the apparatus is never reduced during a round except for loading errors.
- The minimum weight increment in ISF competitions is 1.25 kg (2.5 kg in the Barbell Squat). An athlete may compete in Classic Streetlifting and Weighted Calisthenics exercises only with added weight; an attempt without added weight (0 kg) is not valid.
- The total weight attached to the athlete’s belt must be a multiple of 1.25 kg, and the barbell weight a multiple of 2.5 kg. Exception — record attempts: the weight must be at least the current record + 0.5 kg and a multiple of 0.5 kg; a weight that is not a multiple of the increment is allowed only for a record of the division and category in which the athlete is competing. If, because of a loading error, a successful attempt was made with a weight that is not a multiple of the increment, the nearest lower multiple of the increment is recorded. If a declared record weight that is not a multiple of the increment has already been exceeded by another athlete in the previous round, the weight is rounded to the nearest multiple of the increment.

7.7 Record Attempts & Conditions

7.7.1 General Conditions for ISF Records

An official ISF record may be recognized only if all of the following conditions are met:

- The attempt is performed at an official ISF event or at a competition held under the authority of a recognized ISF partner federation;
- The event is listed in the official ISF calendar or is pre-approved in writing;
- The athlete is registered in the correct division, age, weight, and competition category;

The attempt must occur during one of the following:

- One of the three official rounds in Classic Streetlifting or Weighted Calisthenics;
- The official 2-minute attempt in Multirep Streetlifting;
- An extra record attempt after Round 3 — Classic Streetlifting only, with Jury approval (see § 7.7.4);

On-platform requirements:

- Referees according to the record level: world — three ISF International Referees; continental — three referees of at least national category; national — three referees, the Chief Referee of at least national category;
- Front-facing video recording of the attempt is mandatory.

7.7.2 Record Disciplines

ISF records are maintained in the following disciplines:

a) Classic Streetlifting

- Pull-Up (1 rep max)
- Dip (1 rep max)
- Combined Score (Total): sum of best valid pull-up and dip attempts

b) Multirep Streetlifting

- Pull-Ups for Reps (2 min): highest number of valid repetitions
- Dips for Reps (2 min): highest number of valid repetitions
- Multirep Total: sum of reps in both exercises at the same event

c) Weighted Calisthenics

- Pull-Up (1 rep max)
- Dip (1 rep max)
- Muscle-Up (1 rep max) — Bar for men; Ring for women (or Bar under § 4.3)
- Barbell Squat (1 rep max)
- Total (Weighted Calisthenics): sum of best valid attempts in all four exercises

7.7.3 Special Conditions

- In Multirep disciplines, the kettlebell weight must match the officially approved value for the athlete’s division and category (see § 2.2);
- Two-Lift Total records are valid only if both exercises are performed at the same event;
- Weighted Calisthenics Total is calculated only from valid attempts. A two-lift or four-lift total in which the result in at least one exercise is 0 is 0 and is not a record.

7.7.4 Record Attempt Submission

- An extra record attempt may be granted only after Round 3, only in Classic disciplines (see § 10.6), and only if approved by the Jury and the athlete’s third attempt was successful.
- Submission of an extra record attempt:
- Must be declared no later than 1 minute after the previous attempt;
- The weight must be at least the current record + 0.5 kg (§ 10.3); the result of the extra attempt does not count toward the total or placings.

7.7.5 Record Verification and ratification

- A record may be established on any successful standard attempt (1–3), or on an extra record attempt (4th attempt) in Classic disciplines (see § 10.6).
- In Multirep disciplines, a new record is automatically registered if the rep count exceeds the current record under compliant conditions.
- The result must be entered in the official competition protocol and verified by three referees and the Chief Secretary;
- Video recording of the attempt is mandatory;
- Protocols, judge cards and video must be submitted to ISF within 7 calendar days;
- Upon verification, ISF grants official record status.

7.7.6 Tied Results

If two or more athletes achieve the same record result under §§ 7.7.1–7.7.5:

1. Official record-holder status is awarded to the athlete who first achieved the result at the competition.

2. Subsequent athletes matching the result are not registered as new record-holders.

3. Any further exceeding of the previous record establishes a new absolute record.

See also the procedure for ranking tied results in § 7.10.

7.8. Attempt Refusal & Disqualification

7.8.1. Attempt Refusal

An athlete may refuse an attempt in the following cases:

- Before the “Start!” command: the athlete may step away from the apparatus or decline the attempt without further penalty; the attempt is counted as used (no-lift);
- After the “Start!” command but without initiating movement: the attempt is considered failed;
- In Multirep format, the athlete may stop at any time — only referee-confirmed repetitions will be counted;
- If the athlete does not take the start position within 1 minute of being called (all formats, § 7.5.1) — the attempt is skipped and marked as failed.

REFERENCE
Refusal of all three attempts in Classic or Weighted Calisthenics without valid reason (e.g., fear, unpreparedness, rule violations) may be considered unsportsmanlike behavior and result in disqualification (see below).

7.8.2. Disqualification from a Specific Attempt An athlete may be disqualified from a specific attempt if they:

- Violate the execution technique as specified in Section 4;
- Fail to follow referee signals;
- Create a safety hazard for themselves, referees, or assistants;
- Receive any intervention or assistance from coaches, assistants, or other individuals during execution;
- Display prohibited behavior that disrupts the competition (e.g., yelling, aggression, intentional refusal to fixate, etc.).

7.8.3. Disqualification from an Exercise

An athlete is disqualified from an entire exercise if:

- They fail all three attempts in the same exercise;
- Disqualified by the referees or jury for gross technical violations or safety concerns;
- Medically withdrawn (e.g., due to injury or health risk);
- Continue participation after official refusal by a referee or medical staff.

REFERENCE
In such cases

- The athlete may not proceed to further rounds of that exercise;
- In Total or Multievent formats, a score of 0 is recorded for the disqualified discipline and the total is 0 (§§ 10.9.1, 10.9.6);
- Results are not included in rankings or record evaluations.

7.8.4. Full Disqualification from the Competition

An athlete is subject to full disqualification if they:

- Display gross unsportsmanlike conduct (aggression, insults, sabotage);
- Use alcohol or prohibited substances at the venue;
- Violate anti-doping rules;
- Repeatedly ignore referee instructions;
- Attempt to use unauthorized equipment or receive external assistance.

The disqualification is issued by the Jury and recorded in the official report. The athlete may be banned from future ISF competitions for a period determined by the ISF Disciplinary Commission.

7.8.5. Additional Provisions

- In Multirep, after three consecutive errors (corrective signals without a counted repetition, §§ 4.1–4.2) the attempt ends on the “Finish!” command; repetitions completed before that are counted and the athlete leaves the platform;
- Refusal to enter the platform results in the loss of that attempt or exercise;
- Disqualification from an exercise or from the competition (§§ 7.8.3–7.8.4) may be appealed within 1 hour after the session ends by a written appeal to the Jury (in its absence — to the Head Referee), as in the IPF; the decision on such an appeal is final at the competition, and afterwards only a written complaint to ISF is possible; referee decisions on an individual attempt are appealed under § 7.9.2.

7.9. Appeals & Decision Review

7.9.1. Right to Appeal

An athlete or their accredited representative may submit an appeal in the following cases:

- Disputed referee evaluation (e.g., 2:1 or 3:0 decisions);
- Technical or organizational errors (e.g., incorrect weight, equipment malfunction, protocol violation);
- Situations involving access, signals, spotters, etc.

NOTE
Appeals concerning medical or anti-doping matters follow a separate procedure (see § 5.5).

7.9.2. Appeal Timeframe

An appeal against a referee decision must be lodged with the President of the Jury immediately after the attempt (before the next attempt on the platform); complaints about the conduct of the competition or of officials — within 60 minutes after the end of the group session. Appeals lodged outside these limits are not considered. An appeal against a referee decision may be made orally; the Jury may require it in writing (§ 7.9.3).

7.9.3. Submission Format

Complaints about the conduct of the competition must be submitted in writing using the ISF-approved form; appeals against referee decisions — orally or in writing (if required by the Jury). A written appeal must include:

- Athlete’s full name and category;
- Description of the issue and relevant moment;
- Clear basis for the appeal (e.g., referee error, incorrect weight, defective belt);
- Supporting video (if available and of acceptable quality);
- Proof of appeal fee payment.

7.9.4. Appeal Fee

To process the appeal, a fee must be paid:

- National competitions: 15 USD;
- International competitions: 30 USD. The amount may be changed by the Competition Regulations.

The fee is refunded if the appeal is upheld or is found by the Jury to have been made in good faith. If the Jury finds the appeal frivolous or mischievous, all or part of the fee is retained and donated to the ISF.

7.9.5. Review Procedure

- The Jury reviews an appeal against a referee decision immediately, suspending the competition if necessary (including instant video replay); complaints about the conduct of the competition — within 60 minutes of submission.
- They may request further clarification or video evidence.
- Final decisions are made by majority vote and recorded in the protocol.
- Jury decisions are final and may not be appealed further.

7.9.6. Outcome of a Successful Appeal

If an appeal is upheld:

- The Jury changes the decision on the attempt (valid or no-lift); the Jury’s decision is final;
- On appeal, an extra attempt is granted only on the grounds of § 7.4.5 (loading error, organizer’s equipment failure, assistant error) — at the end of the round; if the athlete was last, a rest period under § 7.4.5 is granted before it.

7.9.7. Record Attempt Video Review

Within 30 days after a competition, video of record-breaking attempts may be reviewed to:

- Verify the declared weight was lifted;
- Adjust the record if the actual weight differs;
- Confirm the official record.

NOTE
This review applies only to record lifts, not to general performance appeals or refereeing disputes.

7.10 Determination of winners in case of tied results

7.10.1 If two or more athletes achieve an identical total or result, the athlete with the lower bodyweight at the official weigh-in ranks higher.

7.10.2 If their bodyweights at the official weigh-in are identical, the athlete who achieved the result (total) first ranks higher. The same procedure applies to individual lifts; for records, the record goes to the athlete who achieved it first (§ 7.7.6).

SECTION 8. REFEREE PANEL

International Streetlifting Federation

8

8.1. Composition and Functions

Each ISF competition platform must be supervised by a panel of three certified referees:

- Chief (Center) Referee
- Two Side Referees

Referees must be positioned to have the best possible view of the athlete's execution. The Chief Referee must remain in the athlete's line of sight. Before competition begins, all referees must ensure:

- Equipment is correctly set up and calibrated;
- Weights are verified;
- The scale is functional;
- Backup belts are available;
- All technical standards are met.

Referee Duties:

- Give official commands: "Get Ready", "Start", "Finish" (see Section 4);
- Judge the validity of each attempt;
- Check equipment compliance;
- Monitor proper weight setup and report discrepancies to the Head Referee;
- Display their decision using the light signal system (white/red) simultaneously with the Chief Referee.

8.1.1. Referee Signals

Referees use the standard ISF visual system:

- White light — Valid Attempt ("Good Lift")
- Red light — Invalid Attempt ("No Lift")

If the light system is unavailable, flags or cards of the same colours are used. Commands are given by voice and hand signal: "Get Ready!", "Start!", "Finish!" (end of attempt); in the Barbell Squat the bar is re-racked on the "Rack!" command.

8.2. Conduct, Standards, and Responsibilities

ISF Referees must:

- Maintain neutrality and avoid commenting during performances;
- Not use mobile phones or electronic devices while refereeing;
- Avoid influencing other referees' decisions;
- Act as a unified team and notify each other of faults.

Warnings apply only to equipment and appearance: a referee issuing a warning must inform the other referees, so that a repeat of the same violation can be judged as a No Lift by all three. Any remark regarding gear or appearance by a referee is considered an official verbal warning; a repeat offense = No Lift. Technique is judged only under Section 4, without warnings.

Referees must declare any conflict of interest (e.g., family member or coached athlete). The Jury (or, in its absence, the Head Referee) decides whether the referee should be removed from that attempt or session.



8.3. Referee Uniform

ISF referees must wear:

- White shirt or polo with ISF logo and “REFEREE” on the back;
- Dark blue or black trousers/skirt;
- Closed-toe shoes (no sandals or open footwear).

Name and referee category may be displayed on the chest. Clothing must be clean and professional.

8.4. Referee Categories

Category	Authorized Level	Certifying Body
Junior Referee	City/local and youth competitions	Regional Referee Board
Regional Referee	Regional competitions	Regional or National Referee Board
National Referee	National championships	National Referee Commission
International Referee	ISF international competitions	ISF Referee Committee

8.5. Qualification Criteria

8.5.1. Junior Referee

- Minimum age: 14 years
- Experience: 1 year in ISF competitions or volunteer role
- Theory: Online ISF test – minimum 85% correct

- Practice: 1 supervised internship
- Duties: Officiate at youth/local meets

8.5.2. Regional Referee

- Minimum age: 16 years
- Experience: 3 events as Junior Referee
- Theory: Online ISF test – minimum 90%
- Practice: 2 full events as a side referee under supervision
- Certification: Regional or National Referee Board
- Duties: Officiate regional competitions, form referee panels

8.5.3. National Referee

- Minimum age: 18 years
- Experience: 1 year as Regional Referee
- Theory: ISF online exam – 95% (English and native language)
- Practice: 4 regional events, 10+ sessions judged
- Certification: Exam + interview by National ISF Commission
- Duties: Head Referee and Chief Referee at national championships, authorized for national record validation

8.5.4. International Referee

- Minimum age: 21 years
- Experience: 2+ years as National Referee
- Practice: 3+ international tournaments, 12+ sessions, 3+ record sessions
- Theory: Written exam (English) + ISF Committee interview
- Duties: Chief (center) referee and jury member at ISF internationals, examiner for new candidates

ISF Referee Certificate is valid for 2 years. Re-certification is required via online test or educational seminar. National federations maintain a digital registry of referees, updated annually.

8.6. Status Maintenance & Re-Certification

- Referees must officiate at minimum 2 competitions per year at their level.
- After an inactivity period (1 year for Junior/Regional; 2 years for National/International), re-certification is required.
- Referees must stay up to date with ISF rule updates and pass re-accreditation as new editions are released.

8.7. Referee Ethics and Conduct

- Referees must maintain strict neutrality and impartiality.
- Referees may not officiate over their own relatives, students, or team athletes.
- Use of phones, filming, or external communication during officiating is strictly prohibited.
- Violations of ethics, bias, falsification, or ignoring rules are grounds for temporary or permanent suspension and mandatory re-certification.

8.8. Jury: Composition, Authority, and Operation

REFERENCE
Purpose: A Jury is mandatory for ISF international events and recommended at national events. If absent, its role is temporarily assumed by the Head Referee — the referee in charge of the refereeing team, appointed by the organizer in agreement with ISF or the national federation (international events — International Referee; national events — at least National Referee; other events — at least Regional Referee); the Head Referee does not referee on the platform at the same time. Composition

- Minimum of 3 referees, including a President of the Jury
- President of the Jury must hold the highest national or international referee category

REFERENCE
Jury Powers

- Ensure ISF technical rules are followed;
- Replace referees in case of repeated or gross mistakes;
- Review appeals (see Section 7.9);
- Approve an extra attempt on appeal only on the grounds of § 7.4.5 (loading error, organizer’s equipment failure, assistant error) — see § 7.9.6

REFERENCE
Limitations: The Jury cannot overrule real-time referee decisions except in the following cases

- Confirmed technical error (e.g., incorrect weight setup);
- Procedural violations (e.g., improper timing, platform call);
- Approved athlete appeal (see § 7.9)

REFERENCE
Location & Operations

- The Jury must be visible and accessible from the platform and maintain direct communication with the referee panel and Secretariat.
- Before the event, the President of the Jury must ensure all Jury members are familiar with the latest ISF Rulebook.

SECTION 9. SECRETARIAT & COMPETITION RECORDS

International Streetlifting Federation

9

9.1. Purpose and Functions of the Secretariat

The Secretariat is the technical body of the tournament responsible for the documentation, registration oversight, creation of start lists, and accurate recording of competition results.

The Secretariat’s responsibilities include:

- Organizing and conducting athlete registration;
- Weigh-in procedure and assigning official weight category (see Section 3.4);
- Verifying declared disciplines and divisions;
- Preparing start lists and referee protocol sheets;
- Managing the timer, tracking attempts, and timekeeping;
- Entering results in real-time into the competition protocol;
- Transferring data to the referee panel and jury;
- Maintaining the final tournament protocol and confirming results with signatures.

9.2. Personnel and Qualifications

The Secretariat must consist of:

- Chief Secretary of the tournament;
- 1–2 assistants, depending on the scale of the event;
- Digital protocol operator (if electronic systems are used).

The Chief Secretary is appointed by the tournament organizer or ISF (for international events) and must have prior experience managing competitions at national level or higher.

9.3. Documents Issued by the Secretariat

The following documents are mandatory:

- Athlete application forms;
- Registration and consent forms (including parental consent for minors);
- Weigh-in protocols;
- Start lists (by session/group);
- Referee signal sheets and referee records;
- Current ranking tables;
- Final scoreboards signed by the referee panel;
- Appeal forms (as per Section 7.9).

9.4. Recording of Results

The Secretariat must:

- Log the result only after the Chief Referee’s command and confirmation of at least 2 out of 3 white lights;
- Record not only the result but the outcome type using standardized symbols:
- “Valid” (Good Lift)
- “No Lift”
- “DNS” (Did Not Show)
- “DQ” (Disqualified)
- Maintain live tables for each discipline;

- After the event, compile and publish final rankings for all categories, divisions, and disciplines.

All records must be verified and signed by the Chief Referee of the group and the Chief Secretary.

9.5. Electronic Data Systems

If using digital protocol systems (e.g., SportData, PowerTable):

- The operator must be trained in advance;
- All updates must be synchronized with referee signals;
- The system must track:
- Attempt time,
- Referee IDs,
- Individual judgments,
- Final result;
- Results must be backed up to a redundant storage system.

In case of system failure — the paper protocol becomes binding.

9.6. Publication and Archiving

- Final results must not be published until the session ends, unless the event has a live broadcast with official approval for real-time score display;
- All documentation must be stored by the organizer or national federation for at least 12 months;
- For international events, a full copy of the results must be submitted to the ISF archive.

SECTION 10. ISF RECORDS & RANKINGS

International Streetlifting Federation

10

10.1 Types of Records

The ISF officially registers the following categories of records:

- World Records
- Continental Records
- National ISF Records (based on reports from ISF national offices)
- Regional/Local Records — may be maintained by national/regional bodies but are not included in the ISF central database.

10.2. Record Formats & Disciplines

ISF records are maintained for each discipline and competition format:

Division	Record Format	Unit
Classic Streetlifting	Total & individual lifts (Pull-Up/Dip)	kg
Multirep Streetlifting	Total & individual lifts (Pull-Up/Dip)	number of reps
Weighted Calisthenics	Four-Lift and individual lifts (Pull-Up/Dip/Muscle-Up/Squat)	kg

All athlete parameters are considered:

- Sex (Men / Women)
- Weight category
- Age category
- Sport division: Amateur / Pro

10.3. Record Validation Conditions

Records are valid only when:

- Set at an official ISF-sanctioned event (or an event of a recognized partner federation, see § 7.7.1) with full compliance to technical standards, eligibility criteria, and certified referees;
- For world records — three international-level referees are required (see § 7.7.1); for continental records — three referees of at least national category; for national records — the Chief Referee of at least national category;
- All equipment must be approved or inspected before the attempt;
- Minimum improvement threshold:
- Classic / Weighted Calisthenics: at least +0.5 kg in every lift, the Barbell Squat included (as in the IPF)
- Multirep: at least +1 repetition

10.4. Submission Procedure

- ISF national offices must submit a record report within 7 calendar days after the event, including:
- Referee protocol;
- Verified weight data;
- Video of the attempt (mandatory)
- After review, the record is entered into the official ISF Record Database.

10.5. Dual Record Attribution

- An athlete may receive recognition in both their age category and the open (age) category, if declared during registration.
- Records may be validated:
- In Total/tetrathlon total;
- In individual exercises performed as part of a combined format.

10.6. Special Conditions

- 4th Attempt in Classic Disciplines: A fourth (record) attempt may be granted in each exercise under these conditions:
- The third attempt was successful;
- The fourth attempt is for record purposes only and is approved by the Jury;
- The weight exceeds the current record by at least 0.5 kg (§ 10.3).
- This attempt does not count toward the total, placings, points, rankings, or qualification standards.
- In Multirep and Weighted Calisthenics, additional attempts are not allowed.

10.7. Ties in Record Attempts

Record attempts follow the procedure in § 7.7.6 “Tied Results.”

10.8. Equipment Check

In a record-setting attempt, the Chief Referee must conduct a full equipment check on-platform, before the athlete leaves the competition area.

10.9. ISF PS (ISF Points System)

The official ISF ranking is based on ISF PS (ISF Points System) — a single relative scoring system that makes it possible to compare the results of athletes of different bodyweight and sex in the two-lift total and in the individual lifts.

ISF PS is used for:

- absolute rankings, including rankings common to men and women;
- comparing athletes from different bodyweight categories;
- team rankings by sum of points;
- the official ISF rankings.

10.9.1. ISF PS Formula

ISF PS (ISF Points System) replaces the former ISF Points system and applies to all ISF competitions held from 1 October 2026. Points calculated with vNext K RC1.1 for competitions held from 1 October 2026 are recalculated under ISF PS v1.0. Results of competitions held before 1 October 2026 keep the points calculated with the formula in force at the time.

The current formula version is ISF PS v1.0. The version is recorded in the protocol and in the official ranking; points calculated under different versions are never combined in one ranking.

ISF PS = 100 × Result / Expected

where:

- Result — the added weight in kilograms in the best valid attempt. For the two-lift total it is the sum of the best valid attempts in the pull-up and the dip; if the result in at least one lift is 0 (including where there is no valid attempt in that lift), the two-lift total is 0 and ISF PS = 0; the athlete is not classified in the overall ranking. The fourth (record) attempt is not included in Result (§ 10.6);
- Expected — the expected result for the athlete’s bodyweight (§ 10.9.2).

Final points are rounded to 0.01, half up (0.005 and above are rounded up). Intermediate values (Expected, AgeCoef) are not rounded. If there are no valid attempts, ISF PS = 0.

Places are determined by unrounded points; points rounded to 0.01 are shown in the protocol. If points are equal, § 7.10 applies: the athlete with the lower bodyweight at the official weigh-in is ranked higher; if bodyweight is also equal, the athlete who achieved the result first.

The 100-point benchmark is the 90th percentile of the ISF PS v1 base (9,100 results from ISF, WSF and OSL competitions, 2019–2026), that is, the level exceeded by about 10% of the strongest competing athletes. The benchmark is the same for men and women and for all three disciplines, so points from different segments are comparable.

10.9.2. Expected Result

Expected is calculated from the athlete’s bodyweight BW (kg) recorded at the official weigh-in with the weigh-in precision (0.1 kg) and without further rounding:

- pull-up: Expected = Kp × BW^0.60;
- dip: Expected = Kd × BW^0.80;
- two-lift total: Expected = Kp × BW^0.60 + Kd × BW^0.80.

If bodyweight is outside the range given in § 10.9.3, the nearest limit of the range is used.

Example: men, pull-up, BW = 80.5 kg, Result = 72.5 kg → Expected = 6.04 × 80.5^0.60 ≈ 84.0455 kg; ISF PS = 100 × 72.5 / 84.0455 ≈ 86.26.

10.9.3. Official Parameters (Classic Streetlifting)

	Kp	Kd	Bodyweight range
Men	6.04	3.83	52–125 kg
Women	3.46	2.32	42–80 kg

The parameters are official and mandatory and correspond to ISF PS v1.0; they may be changed only through a new edition of the ISF Rules or an official ISF decision on a new formula version. The official calculator is https://streetlifting.pro/isf-points/; it must implement the formula version given in § 10.9.1.

Coefficients for Weighted Calisthenics are given in § 10.9.6. Coefficients for Multirep Streetlifting are approved by ISF separately; until then, results are counted in repetitions.

10.9.4. Age and Bodyweight

In the open absolute ranking age is not taken into account: sub-juniors, juniors, adult athletes and masters are compared on the single ISF PS scale.

In the masters absolute ranking, in the combined masters category "40+" and in the masters sub-categories M1–M6 where they are held (§ 3.3), points are multiplied by an age coefficient:

ISF PS (age-adjusted) = ISF PS × AgeCoef

- up to and including 40 years: AgeCoef = 1.00;
- from 41 to 60 years: AgeCoef = 1 / (1 − 0.011 × (age − 40));
- over 60 years: AgeCoef = 1 / (0.78 − 0.021 × (age − 60)).

Age is the number of full years on the first day of the competition. Age over 75 is taken as 75. The coefficient is the same for men and women. No age coefficient is given to sub-juniors and juniors.

AgeCoef is not rounded. The table below is for reference only, to three decimal places (0.001); the value of the formula is used in the calculation.

Age	AgeCoef	Age	AgeCoef
up to 40	1.000	60	1.282
45	1.058	65	1.481
50	1.124	70	1.754
55	1.198	75 and over	2.151

Age-adjusted points are calculated from unrounded ISF PS and AgeCoef and rounded to 0.01.

No separate bodyweight bonus applies: bodyweight is built into the expected result (§ 10.9.2).

Control examples (no age coefficient; Expected is given to four decimals, points are rounded to 0.01):

Sex	Event	BW, kg	Result, kg	Expected	ISF PS
M	pull-up	55	50	66.8736	74.77
M	pull-up	80.5	72.5	84.0455	86.26
M	pull-up	105	120	98.5713	121.74
M	dip	60	80	101.3257	78.95
M	dip	75	110	121.1289	90.81
M	dip	110	120	164.5557	72.92
M	two-lift total	59.1	167.5	169.9295	98.57
M	two-lift total	82	185	215.0734	86.02
M	two-lift total	105	320	257.1155	124.46
M	two-lift total	130 (as 125)	280	291.7166	95.98
M	two-lift total	48 (as 52)	120	155.0257	77.41
W	pull-up	46.42	36.25	34.6018	104.76
W	pull-up	67.5	25	43.3170	57.71
W	dip	48	30	51.3430	58.43
W	dip	60	45	61.3775	73.32
W	two-lift total	52	50	91.7788	54.48
W	two-lift total	58.05	85	99.3456	85.56
W	two-lift total	61.9	147.5	104.0510	141.76
W	two-lift total	85 (as 80)	100	125.2266	79.86

Control examples with the age coefficient (AgeCoef is given to five decimals; the unrounded formula value is used in the calculation):

Sex	Event	BW, kg	Result, kg	ISF PS	Age	AgeCoef	Adj. points
M	two-lift total	73.75	180	90.34	41	1.01112	91.34
M	two-lift total	80	150	71.00	50	1.12360	79.77
M	dip	78	100	80.01	62	1.35501	108.41
W	two-lift total	59.15	65	64.55	52	1.15207	74.37
M	pull-up	70	40	51.76	78 (as 75)	2.15054	111.30

10.9.5. Conditions for Inclusion in the Official ISF Rating

To be included in the official ISF rating, the following conditions must be met:

- an accredited judging panel;
- verified and approved equipment;
- full compliance with all technical and organizational ISF requirements;
- the competition must be conducted in accordance with these Rules.

Results that do not meet these conditions shall not be included in the official ISF rating.

10.9.6. ISF PS for Weighted Calisthenics

For Weighted Calisthenics (muscle-up, pull-up, dip, barbell back squat), ISF PS is calculated with the formula in § 10.9.1:

ISF PS = 100 × Result / Expected

The current version is ISF PS WC v0 (provisional). The version is recorded in the protocol and in the official ranking.

Result is the weight in kilograms in the best valid attempt:

- in the muscle-up, pull-up and dip, the added weight;
- in the squat, the barbell weight.

For the total, Result is the sum of the best valid attempts in all four lifts. If the result in at least one lift is 0 (including where there is no valid attempt in that lift), the four-lift total is 0 and ISF PS = 0. The athlete is not classified in the overall ranking. The fourth (record) attempt is not included in Result (§ 10.6).

Expected is calculated from the athlete's bodyweight BW (kg) as set out in § 10.9.2. If bodyweight is outside the range in § 10.9.3, the nearest limit is used.

- pull-up: Expected = Kp × BW^0.60;
- dip: Expected = Kd × BW^0.80;
- squat: Expected = Ks × BW^q;
- total: Expected = Km + Kp × BW^0.60 + Kd × BW^0.80 + Ks × BW^q.

	Km	Kp	Kd	Ks	q	BW range
Men	30.00 kg	6.04	3.83	6.74	0.80	52–125 kg
Women	17.50 kg	3.46	2.32	9.88	0.65	42–80 kg

Km is the expected muscle-up result. It is taken as constant because no dependence on bodyweight was found in the data. No separate ISF PS is awarded for the muscle-up: until an ISF decision, muscle-up results as a separate lift are counted in kilograms. Separate squat points are calculated as Ks × BW^q.

The 100-point benchmark is about the 90th percentile of the athletes' best results in the four-lift base (2,505 athletes, 2020–2026), that is, the level exceeded by about 10% of the strongest athletes. The benchmark is the same for men and women.

Rounding, placings and ties follow § 10.9.1. The age coefficient follows § 10.9.4.

Weighted Calisthenics points and Classic Streetlifting points belong to different disciplines. They are not combined in one total ranking.

The parameters are official and mandatory. They may be changed only through a new edition of the ISF Rules or an official ISF decision on a new formula version.

Control examples (Expected is given to four decimals, points are rounded to 0.01):

Sex	Event	BW, kg	Result, kg	Expected	ISF PS
M	total	55	250	357.7081	69.89
M	total	73.75	365	439.5691	83.04
M	total	101.3	525	551.6422	95.17
M	total	130 (as 125)	490	642.4823	76.27
M	squat	80	180	224.4563	80.19
W	total	57	200	252.3448	79.26
W	total	48	152.5	226.4854	67.33
W	total	85 (as 80)	210	313.2427	67.04
W	squat	57	110	136.7967	80.41

Control examples with the age coefficient:

Sex	BW, kg	Result, kg	ISF PS	Age	AgeCoef	Adj. points
M	80	390	83.74	45	1.05820	88.61
W	60	195	74.81	55	1.19760	89.59
M	90	385	75.99	66	1.52905	116.19

SECTION 11. CONFLICT OF INTEREST AND ISF CODE OF ETHICS

International Streetlifting Federation

11

11.1 Principles and Objectives

All ISF members, officials, organizers, referees, and athletes must act in the best interests of the sport, avoiding situations where personal benefit could compromise the objectivity of decisions or undermine trust in competitions.

11.2 Conflict of Interest

A conflict of interest is defined as any situation in which a private, family, professional, or financial interest may influence the performance of one’s duties within the ISF.

Examples of conflicts include:

- A referee judges a relative or trainee;
- An organizer awards a contract to themselves without a transparent process;
- A board member promotes personal or club interests to the detriment of others.

11.3 Declarations and Actions

- All ISF officials must sign a declaration of no conflict of interest;
- In the event of an actual or potential conflict, the person must immediately notify the ISF Executive Committee;
- If the conflict is confirmed, the individual shall be removed from the relevant processes or decision-making.

11.4 Ethical Code of Conduct

All ISF representatives are required to:

- Uphold principles of fair play and equal treatment;
- Respect the rights of athletes and colleagues, and prevent discrimination, coercion, violence, or harassment;
- Refrain from slander, inappropriate public statements, and provocation.

Violations of the code are reviewed by the ISF Disciplinary Commission.

SECTION 12. REGISTRATION AND RECOGNITION OF NATIONAL FEDERATIONS

International Streetlifting Federation

12

12.1 General Provisions

The International Streetlifting Federation (ISF) recognizes national sports organizations (hereinafter referred to as NFs) that represent and promote streetlifting within the territory of a specific country.

Only NFs officially recognized by the ISF have the right to:

- Officially represent their country at ISF international tournaments;
- Organize national championships with ISF ranking status;
- Send delegates to ISF congresses, voting procedures, and expert commissions;
- Nominate candidates for international refereeing and organizational positions within ISF.

12.2 Recognition Criteria

To obtain official status as a national representative of ISF, an organization must:

- Be registered as a non-profit or sports organization under applicable national law;
- Have an active leadership team, open communication channels, and publicly accessible information;
- Have hosted at least one national tournament under ISF rules within the last calendar year;
- Sign an agreement to comply with the ISF Statute and Official Rules;
- Maintain a minimum panel of three certified ISF referees;
- Submit a report detailing sports activity, registered clubs, certified referees, and active athletes.

12.3 Application Procedure

- The application must be submitted in writing to the ISF Executive Committee;
- The application must include the organization's charter, registration certificate, operational report, structure, and contact details;
- Review period: up to 30 calendar days from the date of submission of a complete application package;
- Following the review, ISF may issue one of the following decisions: full recognition / provisional recognition / rejection with explanation.

12.4 Suspension and Revocation of Status

ISF reserves the right to suspend or revoke the recognition of an NF in the event of:

- Repeated violations of the ISF Statute or Rules;
- Failure to cooperate, report, or participate in international ISF initiatives;
- Actions that discredit the sport or the ISF as an organization.

Changes in Version 5.2 (compared with Version 5.1)

- Added a clause that the English text prevails in case of discrepancies between language versions.
- Section 2: Multirep weight standards confirmed; Multirep attempt time is 2 minutes; Weighted Calisthenics single-lift events are allowed if provided for in the Competition Regulations.
- Section 3: categories defined by sex, following IPF; the non-binary category is now the “Unrestricted Division”; Adaptive — results only, no ISF records.
- Section 4: the 30° rule removed; a single rule on downward movement and rebound; squat depth as in IPF; Ring Muscle-Up added (§ 4.3.2); weight centre of gravity, dropped weights and the sanction for dropping the bar clarified; a false start is stopped and the commands are repeated (not a no-rep); double bouncing at the bottom of the dip is a no-rep; disputes are decided by a 2-of-3 majority; a spotter error in the squat gives a repeat attempt.
- Section 5: load attachment only with a textile or synthetic strap; wraps and sleeves as in IPF; tape, lubricants, lettering and equipment sanctions clarified.
- Section 6: equipment list, V-shaped bars and certification clarified; squat barbell requirements moved here from former Section 11; lighter plates allowed for record attempts; certification replaced by ISF approval, the list is published on streetlifting.pro.
- Section 7: weigh-in window of at least 1.5 hours, re-weighing as in IPF; single attempt-change procedure, increment 1.25 kg (2.5 kg in the squat), record attempts may use weights that are not multiples of the increment; 4th attempt for records only, Classic only, with Jury approval and after a successful 3rd attempt; record referees by record level (world — three international, continental — at least national category); one 1-minute countdown from the call (as in IPF); single repeat-attempt rule (§ 7.4.5); appeals and ties as in IPF.
- Sections 8–9: unified referee terms (Chief Referee, Head Referee, President of the Jury, Technical Controller); referee conflicts of interest are decided by the Jury; warnings only for equipment and appearance; the Head Referee defined; disqualification appeals as in IPF.
- Section 10: new ISF Points formula (vNext K RC1.1) with six official segments; AgeFactor = 1.0; bodyweight bonus abolished; record reports within 7 calendar days, video mandatory; minimum record improvement 0.5 kg in every lift (as in the IPF), 1 repetition in Multirep; age is deliberately not taken into account in ISF Points.
- Former Section 11 “Equipment and Supplies” removed (duplicated Section 6); Sections 12–13 renumbered as 11–12.

Changes in version 5.3 (in force from 1 October 2026; compared with version 5.2):

- clauses 10.9–10.9.4 replaced by the ISF PS (ISF Points System) version 1.0: ISF PS = 100 × Result / Expected, with Expected = Kp × BW^0.60 (pull-up), Kd × BW^0.80 (dip) and their sum for the two-lift total; official Kp and Kd parameters and bodyweight ranges; rounding to 0.01;
- masters rankings (masters absolute ranking, combined "40+" category and M1–M6 sub-categories where they are held) apply the AgeCoef age coefficient; the open absolute ranking does not take age into account;
- ISF PS applies to all ISF competitions from 1 October 2026; points calculated with vNext K RC1.1 are recalculated under ISF PS v1.0, while points from before 1 October 2026 are kept;
- in clauses 2.3 and 2.4 the name "ISF Points" is replaced by "ISF PS";
- in clause 4.1 the top position of the pull-up is clarified: the whole lower jaw, from the angle to the chin, must be above the top edge of the bar; the chin need not be brought forward over the bar, and tilting the head back is permitted (new figure).

Changes in version 5.3.2 (compared with version 5.3 dated 01.10.2026):

- § 10.9.6 added: ISF PS for Weighted Calisthenics, version ISF PS WC v0 (provisional): Expected = Km + Kp × BW^0.60 + Kd × BW^0.80 + Ks × BW^q, Km, Ks and q coefficients and control examples; the pull-up and dip are scored as in Classic;
- if the result in at least one lift is 0 (including where there is no valid attempt), the two-lift or four-lift total is 0, ISF PS = 0 and the athlete is not classified in the overall ranking (§§ 7.7.3, 7.8.3, 10.9.1, 10.9.6);
- an athlete may compete in Classic Streetlifting and Weighted Calisthenics exercises only with added weight; an attempt without added weight (0 kg) is not valid (§ 7.6.3);
- §§ 2.3, 10.9.1 and the last paragraph of § 10.9.3 aligned with § 10.9.6; the term ISF PS WC added to the glossary. This applies from the date of approval without retroactive effect: earlier results, points and records are not recalculated.